BIASI S.P.A.

Models:

24S
28S
24SR

Instructions for the installer

Boiler installation and commissioning tips

- Do not forget to remove the transit caps and plugs from the boiler connections these are fitted to every boiler.
- Keep the boiler clear of dust during installation and in particular do not allow any dust or debris to enter the top of the boiler where the flue connection is made. It is recommended that you put a dust sheet over the top of the boiler until you are ready to make the flue connection.
- Because every boiler is fired and tested live at the factory, a small amount of water remains within the boiler. It is possible for this water to initially cause the pump to seize. It is therefore recommended that the pump rotor be manually turned to free its rotation before turning the boiler on.
- Remember to release the auto air purge before filling the boiler. See the instructions to identify the location of this device.
- Do not remove the cap of the pressure test point of the air switch (top right side of the boiler).
- You are strongly advised to flush out the system both cold and hot in order to remove system and installation debris.
- It is also sensible to initially fire and commission the boiler before connecting any external controls such as a room thermostat. By this method if you have a subsequent problem following the addition of an external control you can eliminate the boiler from your fault analysis.
- Do not forget to range rate the boiler to suit the system requirements. This procedure is covered in the commissioning section of the installation manual.
- If the boiler is fitted with a digital programmer, when setting the times for automatic operation, remember that for every “ON” time there must be an “OFF” time to follow and that on every occasion you enter a time you must also indicate which days that you want the boiler to follow the timed settings.
- Some products incorporate an anti cycling time delay. It is normal when first switching the boiler on for the boiler to operate on heating for a few seconds then switch off. After 3–4 minutes has elapsed the boiler will then re ignite and operate perfectly normally. The ignition delay cycle does not prevent normal operation of the boiler to provide domestic hot water.
- If you are in any doubts as to the installation or operation of the boiler please read the instruction manuals thoroughly and then if necessary contact Biasi UK for advice and assistance.

Please remember that if you are in any doubt about the installation of this product you can contact our Technical Helpline on tel. 01902 304400

Important

The manual...	must be read thoroughly, so that you will be able to use the boiler in a safe and sensible way; must be carefully kept. It may be necessary for reference in the future.
Installation...	must be carried out by a qualified person who will be responsible for observing the current Regulations.
First lighting up...	must be carried out by a competent and responsible person; the guarantee is valid from the date it is carried out.
Repairs... (under guarantee)	must be carried out only by a competent and responsible person, using genuine spare parts. Thus do no more than switching off the boiler yourself (see the instructions).
Your boiler...	allows heating up of water to a temperature less than the boiling point; must be connected to a central heating system and/or a hot water supply system, compatible with its performance and output; can be used only for those purposes for which it has been specially designed; must not be touched by children or by those unfamiliar with its operation; must not be exposed to the elements.
The manufacturer...	disclaim all liability for any translations of the present manual from which incorrect interpretation may occur; accepts no responsibility for unsatisfactory performance of the appliance and flue due to failure to comply the following instructions.

TABLE OF CONTENTS

1 General 2
1.1 Overview 2
1.2 Combined control panel 3
1.3 Heating only control panel 3
1.4 Main diagram 24S, 28S 4
1.5 Main diagram 24SR 5

2 General requirements 13
1.6 Technical data mod. 24S 6
1.7 Technical data mod. 28S 8
1.8 Technical data mod. 24SR 10
1.9 Hydraulic specifications 12
1.10 Expansion tank 12
2.1 Related documents 13
2.2 Location of appliance 13
2.3 Flue system 13
2.4 Gas supply 13
2.5 Air supply 14
2.6 Ventilation 14
2.7 Water circulation (central heating) . 14
2.8 Domestic water 15
2.9 Electrical supply 15

3 Installation 16
3.1 Warnings 16
3.2 Precautions for installation 16
3.3 Installing the bracket 17
3.4 Mounting the boiler 17
3.5 Fitting the exhaust fume duct 17
3.6 Electrical connections 18
3.7 Frost protection 19
3.8 Overall dimensions 19
3.9 Joints 19

4 Commissioning 20
4.1 Electrical installation 20
4.2 Gas supply installation 20
4.3 Filling the D.H.W. system 20
4.4 Initial filling of the system 20
4.5 Lighting the boiler 21
4.6 Checking the gas pressure at the burner 21
4.7 Checking the flue system 22
4.8 Checking the ignition device 22
4.9 Adjusting the burner ignition 22
4.10 Adjustment of useful central heating output 23
4.11 Instructing the user 24

5 Gas conversion 25
5.1 Warnings 25
5.2 Procedures 25

6 Maintenance 26
6.1 Warnings 26
6.2 Dismantling the external panels .. 26
6.3 Emptying the domestic hot water system (Combination boilers only) 26
6.4 Emptying the central heating system 27
6.5 Cleaning the primary heat exchanger 27
6.6 Checking the pressurisation in the expansion tank 27
6.7 Cleaning the burner 27
6.8 Checking the exhaust duct 27

Symbols used in the descriptions:

Combi = 24S, 28S
Central heating = 24SR
24 = 24S, 24SR
28 = 28S

This appliance conforms with the EEC directive 90/396 and, consequently, it has the right to make use of the CE brand name

Moreover, the appliance conforms with the EEC directive 87/308 relative to the prevention and elimination of radio disturbances.

The appliance is build to comply with the regulation now in force regarding gas appliance's safety and the European regulation now in force relative to safety of household and similar electrical appliances.

The manufacturer, in the continuous pocess to improve his products, reserves the right to modify the data expressed in the present documentation at any time and without prior notice.

The present documentation is an informative support and it cannot be considered as a contract towards third parties.

1 GENERAL

1.1 Overview

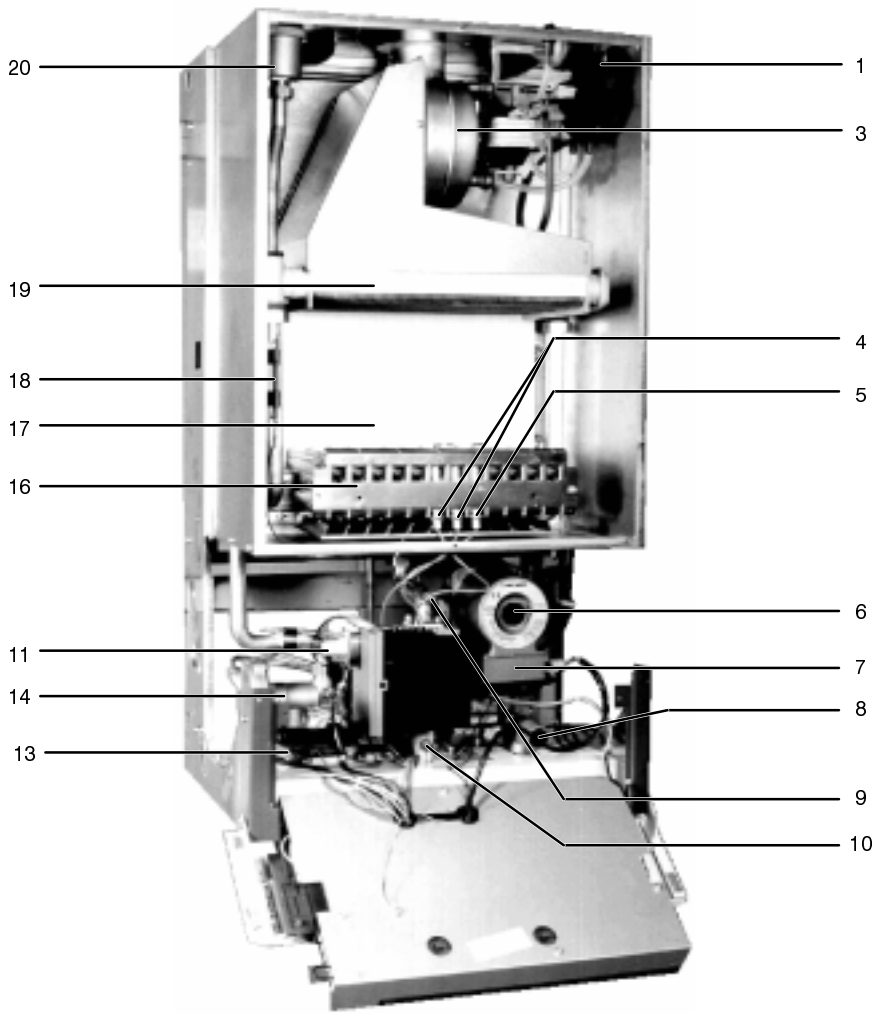

fig. 1.1

1 Air pressure switch
2 Venturi device
3 Fan
4 Ignition electrodes
5 Flame – detecting electrode
6 Pump vent plug
7 Pump
8 3 bar pressure relief valve
9 Gas valve outlet pressure tap
10 Gas valve inlet pressure tap
11 Modulation operator
12 Modulation gas valve
13 Main circuit drain cock
14 Three – way diverter valve
15 Three – way diverter valve body
16 Burner
17 Combustion chamber
18 Safety thermostat
19 Primary heat exchanger
20 Automatic bleed valve
21 Domestic hot water flow switch
22 Central heating flow switch
23 Domestic hot water probe NTC
24 Central heating probe NTC
25 Domestic hot water heat exchanger
26 By – pass
27 Expansion tank
28 Central heating flow cock
29 Domestic hot water outlet pipe
30 Gas cock
31 Domestic cold water inlet cock
32 Central heating return cock
33 Flue outlet pipe
34 Air intake pipe

1.2 Combined control panel

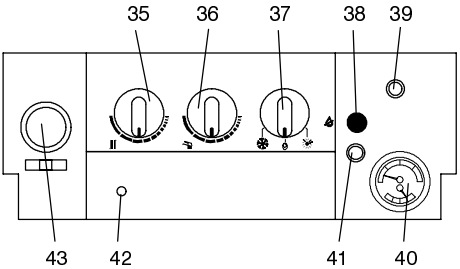

fig. 1.2

1.3 Heating only control panel

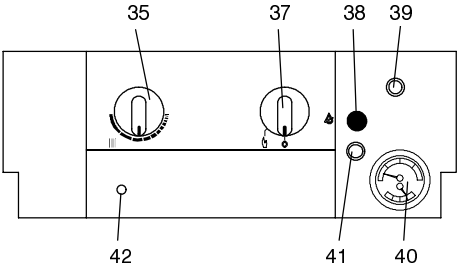

fig. 1.3

35 Central heating temperature adjustment knob
36 Domestic hot water temperature adjustment knob
37 Function switch
38 Lock – out signal lamp
39 Safety thermostat reset button
40 Central heating circuit temperature and pressure gauge
41 Boiler reset button
42 “Appliance ON” Led
43 Time switch (central heating control)

1.4 Main diagram 24S, 28S

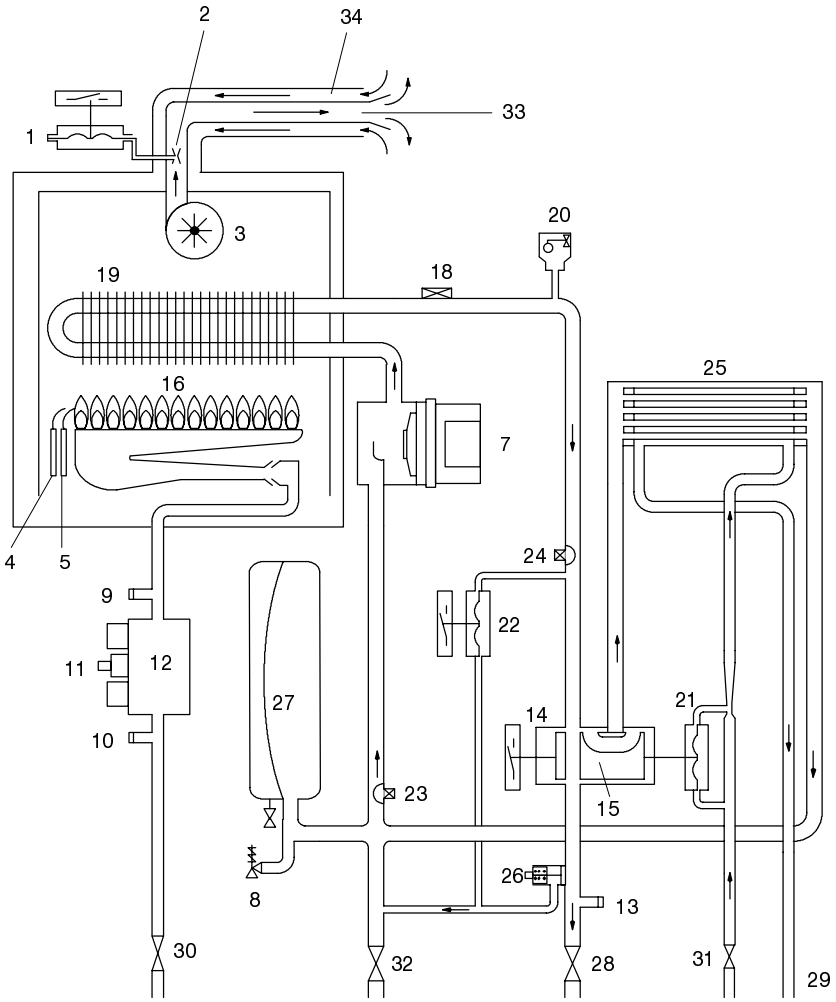

fig. 1.4 (key on page 3)

1.5 Main diagram 24SR

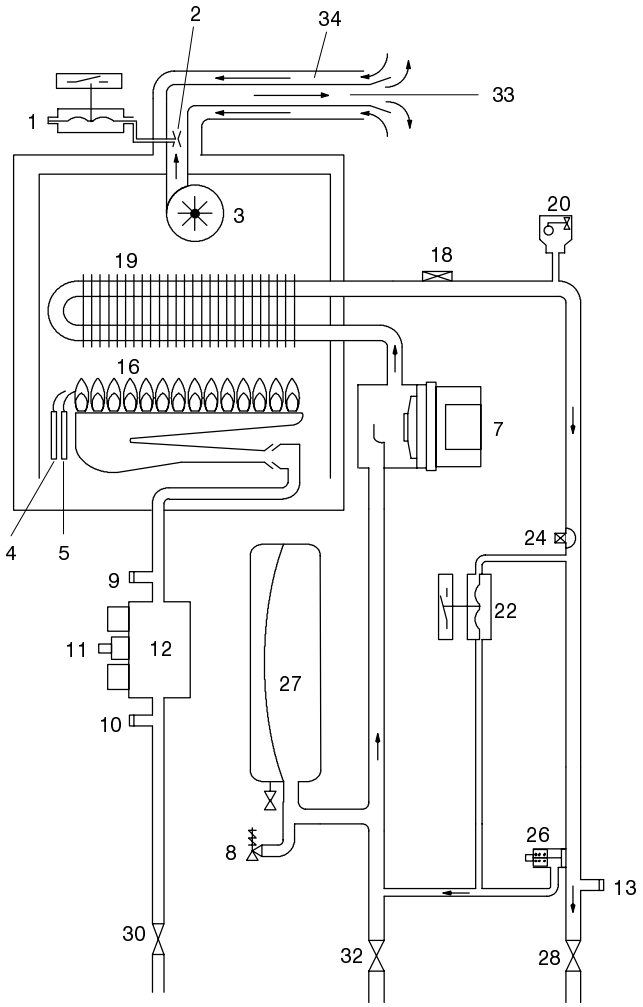

fig. 1.5 (key on page 3)

1.6 Technical data mod. 24S

Nominal heat input	kW	26,6
	BTU/h	*90 754*
Minimum heat input	kW	11,0
	BTU/h	*37 530*
Maximum useful output	kW	24,0
	BTU/h	*81 883*
Minimum useful output	kW	9,3
	BTU/h	*31 730*

Central heating		
Maximum temperature	°C	90
Minimum temperature	°C	35
Maximum pressure	kPa	300
	bar	*3*
Minimum pressure	kPa	30
	bar	*0,3*
Available head (in 1000 l/h)	kPa	26
	bar	*0,26*

Domestic hot water		
Maximum temperature	°C	55
Minimum temperature	°C	37
Maximum pressure	kPa	1 000
	bar	*10*
Minimum pressure	kPa	30
	bar	*0,3*
Flow rate		
minimum	l/min	2,5
30° rise	l/min	11,1
35° rise	l/min	9,5
40° rise	l/min	8,3

Injectors	
Natural G20	125
Butane G30	75
Propane G31	75

Gas supply pressures				
Gas		norm.	min	max
Natural	Pa	2 000	1 700	2 500
G20	*mbar*	*20*	*17*	*25*
Butane	Pa	2 900	2 000	3 500
G30	*mbar*	*29*	*20*	*35*
Propane	Pa	3 700	2 500	4 500
G31	*mbar*	*37*	*25*	*45*

Maximum gas pressures at the burner		
Natural G20	Pa	1 050
	mbar	*10,5*
Butane G30	Pa	2 680
	mbar	*26,8*
Propane G31	Pa	3 500
	mbar	*35,0*
Maximum gas rate		
Natural G20	m^3/h	2,82
Butane G30	kg/h	2,09
Propane G31	kg/h	2,06

Minimum gas pressures at the burner		
Natural G20	Pa	130
	mbar	*1,3*
Butane G30	Pa	550
	mbar	*5,5*
Propane G31	Pa	700
	mbar	*7,0*
Minimum gas rate		
Natural G20	m^3/h	1,16
Butane G30	kg/h	0,87
Propane G31	kg/h	0,85

G 20 p.c.i. 35,9 MJ/m^3
G 30 p.c.i. 45,6 MJ/kg
G 31 p.c.i. 46,4 MJ/kg
1 mbar approximately equals 10 mm H_2O

Electrical Data		
Voltage	V~	220 – 240
Frequency	Hz	50
Power consumption	W	170
Protection degree		IP44
External fuse rating	A	3
Internal fuse rating	A	1,6 T

Flue design		
Minimum venturi pressure	mbar	– 1,2
Flue pipe diameter		
Coaxial	mm	60/100
Twin split pipes	mm	80
Roof	mm	80/120
Nominal heat flow rate*	kW	26,6
Exhaust temperature*	°C	125
Smoke production*	kg/h	70
** Values refer to tests with a 1 m chimney working at the nominal heat input*		

Other specifications		
Height	mm	800
Width	mm	450
Depth	mm	350
Weight	kg	47

1.7 Technical data mod. 28S

Nominal heat input	kW	31,1
	BTU/h	*106 107*
Minimum heat input	kW	13,0
	BTU/h	*44 353*
Maximum useful output	kW	28,0
	BTU/h	*95 530*
Minimum useful output	kW	11,0
	BTU/h	*37530*

Central heating		
Maximum temperature	°C	90
Minimum temperature	°C	35
Maximum pressure	kPa	300
	bar	*3*
Minimum pressure	kPa	30
	bar	*0,3*
Available head (in 1000 l/h)	kPa	26
	bar	*0,26*

Domestic hot water		
Maximum temperature	°C	55
Minimum temperature	°C	37
Maximum pressure	kPa	1 000
	bar	*10*
Minimum pressure	kPa	30
	bar	*0,3*
Flow rate		
minimum	l/min	2,5
30° rise	l/min	13,3
35° rise	l/min	11,4
40° rise	l/min	10,0

Injectors	
Natural G20	125
Butane G30	75
Propane G31	75

Gas supply pressures				
Gas		norm.	min	max
Natural G20	Pa	2 000	1 700	2 500
	mbar	*20*	*17*	*25*
Butane G30	Pa	2 900	2 000	3 500
	mbar	*29*	*20*	*35*
Propane G31	Pa	3 700	2 500	4 500
	mbar	*37*	*25*	*45*

Maximum pressures at the burner		
Natural G20	Pa	1 100
	mbar	*11,0*
Butane G30	Pa	2 680
	mbar	*26,8*
Propane G31	Pa	3 500
	mbar	*35,0*
Maximum gas rate		
Natural G20	m^3/h	3,29
Butane G30	kg/h	2,45
Propane G31	kg/h	2,41

Minimum pressures at the burner		
Natural G20	Pa	140
	mbar	*1,4*
Butane G30	Pa	550
	mbar	*5,5*
Propane G31	Pa	700
	mbar	*7,0*
Minimum gas rate		
Natural G20	m^3/h	1,37
Butane G30	kg/h	1,02
Propane G31	kg/h	1,00

G 20 p.c.i. 35,9 MJ/m^3
G 30 p.c.i. 45,6 MJ/kg
G 31 p.c.i. 46,4 MJ/kg
1 mbar approximately equals 10 mm H_2O

Electrical Data		
Voltage	V~	220 – 240
Frequency	Hz	50
Power consumption	W	170
Protection degree		IP44
External fuse rating	A	3
Internal fuse rating	A	1,6 T

Flue design		
Minimum venturi pressure	mbar	– 1,4
Flue pipe diameter		
Coaxial	mm	60/100
Twin split pipes	mm	80
Roof	mm	80/120
Nominal heat flow rate*	kW	31,1
Exhaust temperature*	°C	120
Smoke production*	kg/h	80
** Values refer to tests with a 1 m chimney working at the nominal heat input*		

Other specifications		
Height	mm	800
Width	mm	500
Depth	mm	350
Weight	kg	49

1.8 Technical data mod. 24SR

Nominal heat input	kW	26,6
	BTU/h	*90 754*
Minimum heat input	kW	11,0
	BTU/h	*37 530*
Maximum useful output	kW	24,0
	BTU/h	*81 883*
Minimum useful output	kW	9,3
	BTU/h	*31 730*

Central heating		
Maximum temperature	°C	90
Minimum temperature	°C	35
Maximum pressure	kPa	300
	bar	*3*
Minimum pressure	kPa	30
	bar	*0,3*
Available head (in 1000 l/h)	kPa	26
	bar	*0,26*

Gas supply pressures				
Gas		norm.	min	max
Natural G20	Pa	2 000	1 700	2 500
	mbar	*20*	*17*	*25*
Butane G30	Pa	2 900	2 000	3 500
	mbar	*29*	*20*	*35*
Propane G31	Pa	3 700	2 500	4 500
	mbar	*37*	*25*	*45*

Maximum gas pressures at the burner		
Natural G20	Pa	1 050
	mbar	*10,5*
Butane G30	Pa	2 680
	mbar	*26,8*
Propane G31	Pa	3 500
	mbar	*35,0*
Maximum gas rate		
Natural G20	m^3/h	2,82
Butane G30	kg/h	2,09
Propane G31	kg/h	2,06

Minimum gas pressures at the burner		
Natural G20	Pa	130
	mbar	*1,3*
Butane G30	Pa	550
	mbar	*5,5*
Propane G31	Pa	700
	mbar	*7,0*
Minimum gas rate		
Natural G20	m^3/h	1,16
Butane G30	kg/h	0,87
Propane G31	kg/h	0,85

Injectors	
Natural G20	125
Butane G30	75
Propane G31	75

G 20 p.c.i. 35,9 MJ/m^3
G 30 p.c.i. 45,6 MJ/kg
G 31 p.c.i. 46,4 MJ/kg
1 mbar approximately equals 10 mm H_2O

Electrical Data		
Voltage	V~	220 – 240
Frequency	Hz	50
Power consumption	W	170
Protection degree		IP44
External fuse rating	A	3
Internal fuse rating	A	1,6 T

Flue design		
Minimum venturi pressure	mbar	– 1,2
Flue pipe diameter		
Coaxial – wall	mm	60/100
Twin split pipes	mm	80
Coaxial – roof	mm	80/120
Nominal heat flow rate*	kW	26,6
Exhaust temperature*	°C	125
Smoke production*	kg/h	70
** Values refer to tests with a 1 m chimney working at the nominal heat input*		

Other specifications		
Height	mm	800
Width	mm	450
Depth	mm	350
Weight	kg	43

1.9 Hydraulic specifications

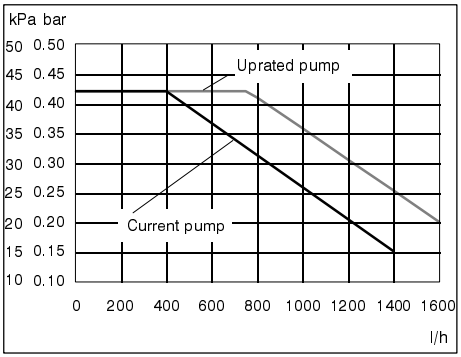

fig. 1.6

The hydraulic specifications in fig. 1.6 represent the pressure (available head of the central heating system) as a function of the flow rate.

The load loss due to the boiler has already been subtracted.

If necessary, it is possible to replace the current pump with an uprated head one (supplied separately).

Output with thermostat cocks shut off

The boiler is fitted with an automatic by–pass valve (26 on page 3), which protects the primary heat exchanger.

In case of excessive reduction or total blockage of water circulation in the central heating system owing to closure of the thermostatic valves or system component cocks, the by–pass valve ensures a minimum flow of water through the primary heat exchanger.

1.10 Expansion tank

The height difference between the pressure relief valve and the highest point in the system may be 7m at most.

For greater differences, increase the pre–load pressure in the expansion tank (27 on page 3) and the system, when cold, by 0.1 bar for each additional 1m.

Total capacity	l	8,0
Pre–load pressure	kPa *bar*	100 *1,0*
Available capacity	l	4,3
Maximum volume of water in the system *	l	150

tab. 1.1

* Where conditions are:

- Average maximum temperature of the system is 80°C
- Initial temperature when filling up the system is 10°C

For systems with volumes greater than 150l, an additional expansion tank must be provided.

2 GENERAL REQUIREMENTS

This appliance must be installed by a competent person in accordance with the Gas Safety (installation & Use) Regulations 1984.

2.1 Related documents

The installation of this appliance must be in accordance with the relevant requirements of the current Gas Safety (Installation & Use) Regulations, the Local Building Regulations, the current I.E.E. Wiring Regulations, the by–laws of the local water undertaking, and in Scotland, in accordance with the Building Standards (Scotland) Regulation. Health and safety document n° 635 "Electricity at work regs.".

It should be in accordance also with the British Standard Codes of Practice:

2.2 Location of appliance

The appliance may be installed in any room or internal space, although particular attention is drawn to the requirements of the current I.E.E. Wiring Regulations, and in Scotland, the electrical provisions of the Building Regulations applicable in Scotland, with respect to the installation of the combined appliance in a room containing a bath or shower.

Where a room – sealed appliance is installed in a room containing a bath or shower, any electrical switch or appliance control, utilising mains electricity should be so situated that it cannot be touched by a person using the bath or shower.

The location must permit the provision of an adequate flue and termination.

For unusual locations special procedures may be necessary and BS 6798–1987 gives detailed guidance on this aspect.

A compartment used to enclose the appliance must be designed specifically for this purpose.

This appliance is not suitable for external installation.

2.3 Flue system

The provision for satisfactory flue termination must be made as described in BS 5440–1 1990.

The appliance must be installed so that the flue terminal is exposed to external air.

It must not be installed so that the terminal discharges into an other room or space as an outhouse or lean–to. It is important that the position of the terminal allows a free passage of air across at all times.

The terminal should be located with due regard for the damage or discoloration that might occur to building products in the vicinity.

In cold and/or humid weather water vapour may condense on leaving the flue terminal; the effect of such "steaming" must be considered.

The minimum acceptable spacing from the terminal to obstructions and ventilation openings are specified in fig. 2.1.

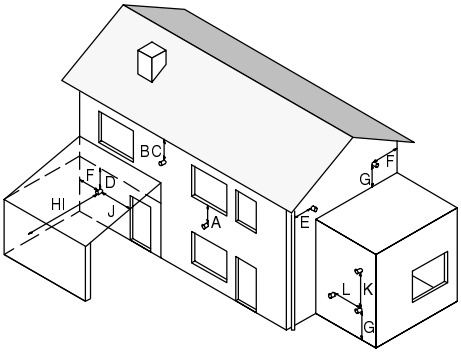

fig. 2.1

	Terminal position	mm
A .	Directly below a window or other opening	300
B .	Below gutters, solid pipes or drain pipes	75
C .	Below eaves	200
D .	Below balconies or car port roof	650*
E .	From vertical drain pipes and soil pipes	75
F .	From internal or external corners	450*
G .	Above ground or below balcony level	300
H .	From a surface facing a terminal	600
I . .	From a terminal facing a terminal	1 200
J .	From an opening in the car port (e.g. door, window) into dwelling	1 200
K .	Vertically from a terminal in the same wall	1 500
L .	Horizontally from a terminal in the same wall	300

* specific manufacturer requirements

2.4 Gas supply

Gas meter is connected to the service pipe by the local gas region or a local gas region contractor.

If the gas supply for the boiler serves other appliances ensure that an adequate supply is available both to the boiler and the other appliance when they are in use at the same time.

Pipework must be of adequate size. Pipes of a smaller size than the boiler inlet connection should not be used.

Installation pipes should be fitted in accordance with BS 6891 – 1988 and the complete installation should be tested for soundness.

2.5 Air supply

The room in which the boiler is installed does not require a purpose provided air vent.

2.6 Ventilation

If installed in a cupboard or compartment, ventilation is also required for cooling.

Recommendations for air supply are detailed in BS 5440 – 2 1989.

2.7 Water circulation (central heating)

Detailed recommendations are given in BS 6798 – 1987 and BS 5449 – 1 1990; the following notes are given for general guidance.

Pipework

Copper tubing to BS EN 1057 – 1996 is recommended for water pipes. Jointing should be either with capillary soldered or with compression fittings.

Where possible pipes should have a gradient to ensure air is carried naturally to air release points and water flows naturally to drain taps.

The appliance has a built – in automatic air release valve anyway, it should be ensured as far as possible that the appliance heat exchanger is not a natural collecting point for air.

Except where providing useful heat, pipes should be insulated to prevent heat loss and to avoid freezing.

Particular attention should be paid to pipes passing through ventilated spaces in roofs and under floors.

By – pass

The appliance includes an automatic by – pass valve which protects the main heat exchanger in case of reduced or interrupted water circulation through the heating system due to the closing of thermostatic valves or cock – type valves within the system.

The by – pass is calibrated to assure a minimum flow of 500 – 600 lts/hr through the main heat exchanger.

If you are installing a system that includes thermostatic radiator valves (TRV) and/or small bore (8 – 10 mm) it may be necessary to fit an external by – pass to facilitate correct operations of the boiler.

Air release points

These must be fitted at all high points where air will natural collect and must be sited to facilitate complete fitting of the system.

The appliance has an integral sealed expansion vessel to accommodate the increase of water volume when the system is heated.

It can accept up to 7 lts (1,5 gals.) of expansion water.

If the heating circuit has an unusually high water content, calculate the total expansion and add additional sealed expansion vessel with adequate capacity.

Mains water feed: central heating

There must be no direct connection to the mains water supply even through a non return valve, without the approval of the Local Water Authority.

The boiler is designed to withstand a domestic water pressure of 10 bar.
Where it is likely that the mains domestic water pressure may exceed 5 bar, it is possible due to internal "water hammer" effects that the pressure within the domestic system can increase to a level in excess of the 10 bar limit.

If these circumstances it is therefore recommended that a 3 bar pressure reducing valve be fitted to the incoming mains water supply and a mini expansion vessel installed on the domestic circuit.

These devices will protect the boiler and the domestic system from damage due to excessive domestic water pressure.

Filling

A method for initially filling the system and replacing water lost during servicing must be provided

and it must comply with local water authority regulations.

A possible method is shown in fig. 2.2.

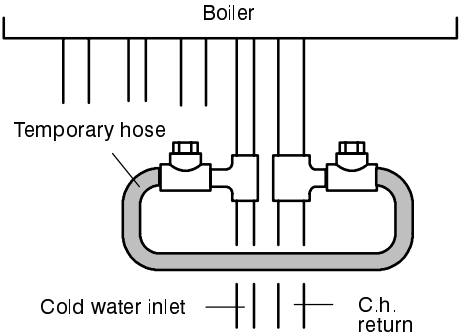

fig. 2.2

The installer should ensure that no leaks exist as frequent filling of the system could cause premature scaling of the heat exchanger.

2.8 Domestic water

The domestic water must be in accordance with the relevant recommendations of BS 5546 – 1990.

Copper tubing to BS EN 1057 – 1996 is recommended for water carrying pipework and must be use for pipework carrying potable water.

2.9 Electrical supply

Warning, this appliance must be earthed.

External wiring to the appliance must be carried out by a competent person and be in accordance with the current I.E.E. Regulations and local regulations which apply.

The boiler is supplied for connection to a 240 V~ 50 Hz supply. The supply must be fused at 3A.

The method of connection to the electricity supply must facilitate complete electrical isolation of the appliance by the use of a fused double pole isolator having a contact separation of at least 3 mm in all poles or alternatively, by the use of a 3A fused three pin plug and unswitched shuttered socket outlet both complying with BS 1363 – 1984.

The point of connection to the electricity supply must be readily accessible and adjacent to the appliance except were the appliance is installed in a bathroom this must be sited outside the bathroom.

3 INSTALLATION

3.1 Warnings

The use of gas appliances is subject to statutory control; it is essential to observe the curent regualtions and laws in force (see also chapter 2).

The appliance must discharge combustion products directly outside or into a suitable exhaust duct designed for this purpose.

Combustion products must be discharged using original flue kits only, since they are integral parts of the boiler.

For LPG, the appliance must also conform with the requirements of the distributors and comply with current Regulations and laws in force.

The safety relief valve must be connected to a suitable drain, or discharge in a safe manner.

The electrical wiring must conform with current Regulations, in particular:

- the boiler **must** be earthed using the correct bonding clamp.
- a fused spur isolation swicth, with a gap of at least 3 mm between the contacts (fig. 3.1) must be installed near to the boiler. Refer to section 3.6 in this chapter for the electrical connections.

In no circumstances may the manufacturer be held responsible if the warnings and instructions contained in this manual should not have been complied with.

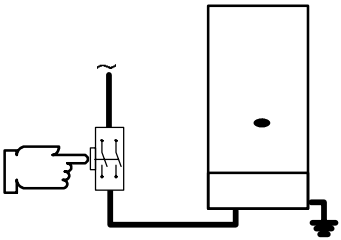

fig. 3.1

3.2 Precautions for installation

For the installation proceed as follows:

- The boiler must be fixed to a strong wall (fig. 3.2).

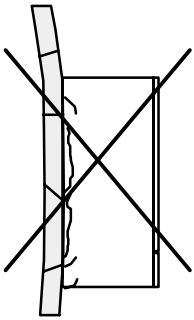

fig. 3.2

- The dimensions for the exhaust fume duct detailed in section 3.5, and the correct procedures for installing the duct, depicted in the instruction leaflet included with the flue kit, must be complied with during installation.
- To allow maintenance procedures it is necessary to leave the minimum gaps indicated in fig. 3.3.

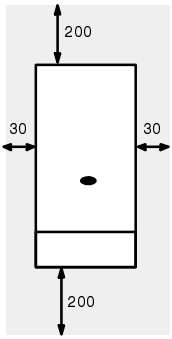

All dimensions in mm

fig. 3.3

- When installing the boiler in a cupboard, cover or in an alcove, further than the distances defined in fig. 3.3, bear in mind that any possible obstacle in front of the boiler (the cupboard door for example) must be at such a distance as to allow a regular air flow; the upper part of the boiler must be freed from any obstacles.
- If the boiler is installed outside, cover the appliance to protect it against the elements and add some special anti–freeze (neutralised) to the central heating system.
  An optional anti–freeze kit is available to be fitted with this appliance.

- Before installing the boiler on an existing central heating system, flush it out thoroughly before fitting the boiler, so as to remove muddy deposits.
- It is advisable to equip the system with a sediment filter, or use a water – treatment product in the circulating water.
  The latter option in particular, not only cleans out the system, but also has an anti – corrosive effect by promoting formation of a protective skin on metal surfaces and neutralising gases present in the water.
  We recommend the use of a suitable universal inhibitory to protect the central heating system from corrosion.

3.3 Installing the bracket

Dimensions and useful data for fitting the boiler are given on separate instructions included with the documents.

Precautions

Before mounting the bracket, check that the dimensions for fitting the exhaust fume duct are complied with (refer to the leaflet included with the flue kit, packed separately).

After mounting the bracket and before mounting the boiler, make sure the gas supply system is not leaking.

3.4 Mounting the boiler

1 Take the protective caps off the boiler pipework.

2 Thoroughly clean the taps.

3 Mount the boiler on its brackets.

4 Connect the pipework using the original seals supplied with the taps. You are recommended to tighten up the water and gas joints well.

5 Connect the pressure relief valve's outlet to a drain (8 in fig. 3.4) .

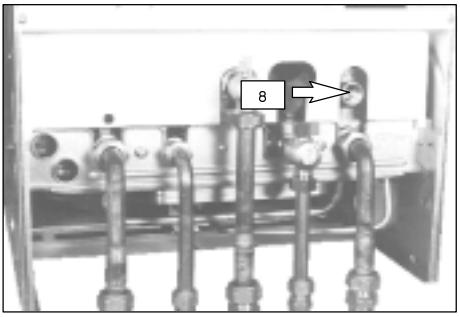

fig. 3.4

3.5 Fitting the exhaust fume duct

Refer to the leaflet included in the chosen kit, packed separately.

The following kits for connecting the boiler to the flue are available:

1 Exhaust fumes from wall and possible co – axial extensions ∅ 60/100 mm

2 Vertical flanged extension ∅ 60/100 mm

3 Connection for co – axial flue ∅ 60/100 mm

4 Additional co – axial 90° or 45° elbow ∅ 60/100 mm

5 Twin split pipes kit and possible extensions ∅ 80 mm

6 Additional 90° or 45° elbow ∅ 80 mm

7 Co – axial discharge to the roof and possible extensions ∅ 80/120 mm

Kit 1 allows the flue to be fitted on any side of the boiler and it can **be shortened to a minimum** of 0.5 m. Use of extensions allows the exhaust fume duct to be lengthened. For all models the greatest total length is 2,65.

Kit 2 is an accessory that allows use of a section of vertical ducting from the boiler.

In fitting, only one type kit 2 can be used.

Kit 3 is an accessory that allows the fumes to be discharged through co–axial flues.

Each additional 90° elbow ∅ 60/100 mm reduces the greatest length of the fume duct by 1 m, whilst those of 45° reduce it by 0.5 m.

Kit 5 is an accessory that allows separation of the air supply pipe from the pipe that discharges fumes in the flue.

Kit 6 is an accessory that allows changing the direction of the pipes of kit 5.

Each additional 90° elbow ∅ 80 mm reduces the maximum length of the duct by 1 m, whilst those of 45° reduce it by 0.5 m.

Kit 7 allows venting of fumes directly to the roof. **The greatest total height is 5 m.**

3.6 Electrical connections

Connection to the electricity supply

To reach the terminal block (A in fig. 3.5) turn over the control, panel cover and remove the front panel of the case (see the section *maintenance*, section 6.2 in this manual).

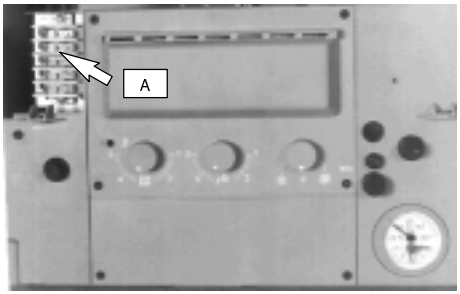

fig. 3.5

For the electrical connection of the boiler use electric wires which conform to the current regulations, with section cable **not less than 0,75 mm²**.

The cable must be long enough to permit turning over of the control panel towards you.

1 Connect the electrical supply cable coming from the fused spur isolation switch to the terminal block for the boiler (fig. 3.6) keeping the same connections for the live (brown wire) and the neutral (blue wire).
External 3 A fuse or fused plug with same current rating is recommended.

Do not connect live wires to terminals to which the room thermostat must be connected.

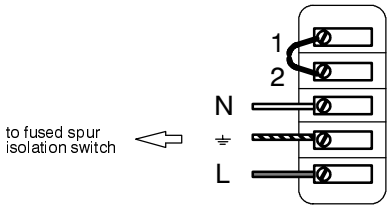

fig. 3.6

2 **Connect the earth wire (yellow/green).**

Connection of a room thermostat

The room thermostat must be connected to the terminal block situated next to the control panel.

When connecting any type of room thermostat, the jumper present between 1 and 2 must be removed.

Never connect live wires to terminals 1 and 2.

Connect the room thermostat as shown in one of the two following schemes (fig. 3.7 or fig. 3.8).

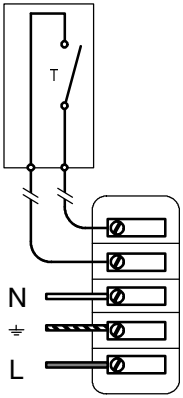

fig. 3.7 Two–wire thermostat. (240 V only).

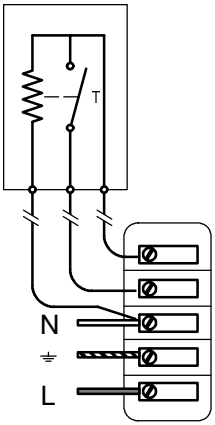

fig. 3.8 Two–wire thermostat with delay resistor (240V only)

3.7 Frost protection

It is not possible to fit a conventional frostat with this boiler.

However, you can introduce a suitable antifreeze solution into the system to protect the boiler from freeze conditions.

Moreover an optional antifreeze kit is available through your authorized dealer.

3.8 Overall dimensions

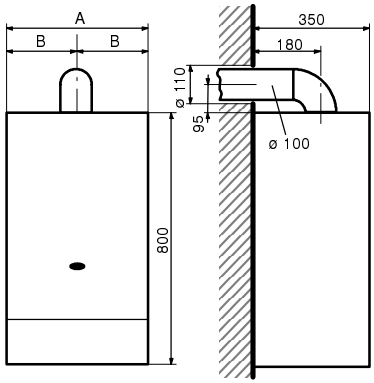

A = 450 for mod. 24
= 500 for mod. 28

B = 225 for mod. 24
= 250 for mod. 28

fig. 3.9

3.9 Joints

Functions	Pipe sizes (mm o.d.)
Gas	ø 22
Central heating return	ø 22
Central heating flow	ø 22
Domestic cold water inlet*	ø 15
Domestic hot water outlet*	ø 15
Pressure relief valve	ø 15 connector
* not present on c.h. only boilers	

tab. 3.1

The positions of the joints are given on separate instructions included with the documents.

4 COMMISSIONING

4.1 Electrical installation

Preliminary electrical system checks to ensure electrical safety shall be carried out by a competent person. I.e. polarity, earth continuity, resistance to earth and short circuit.

If a fault has occurred on appliance the fault finding procedure should be followed as specified under the servicing section of this document.

4.2 Gas supply installation

Inspect the entire installation including the gas meter, test for soundness and purge, all as described in BS 6891 – 1988;

Open the gas cock (30 in fig. 4.1) on the appliance and check the gas connector on the appliance for leaks.

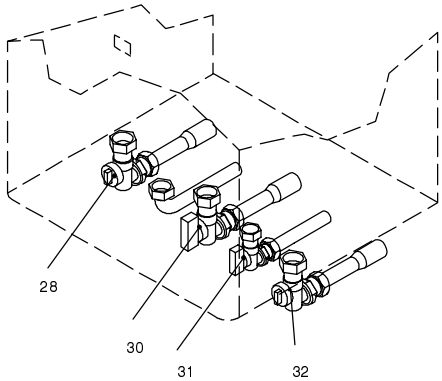

fig. 4.1

4.3 Filling the D.H.W. system

Close all hot water draw – off taps.

Open the cold water inlet cock.

Slowly open each draw – off tap and close it only when clear water, free of bubbles, flows out.

4.4 Initial filling of the system

Open central heating flow and return cocks.

Remove the front panel of the case (see the section *Access to and emptying the hydraulic circuits* in the service manual.

Unscrew the cap on the automatic air release valve (fig. 4.2) one full turn and leave open permanently;

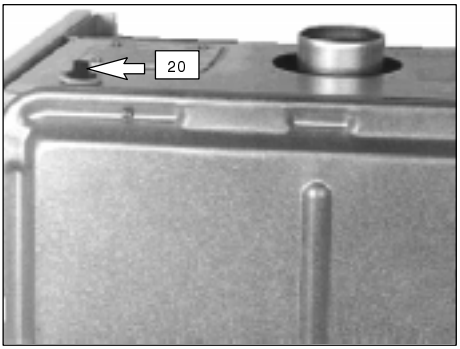

fig. 4.2

Gradually open stopcock at the filling point connection to the central heating system until water is heard to flow; do not open fully.

Open each radiator air release tap starting with the lower point and close it only when clear water, free of bubbles, flows out.

Purge the air from the pump by unscrewing the pump plug indicated (fig. 4.3); release the pump by turning the rotor in the direction indicated by the arrow on the information plate.

Close the pump plug.

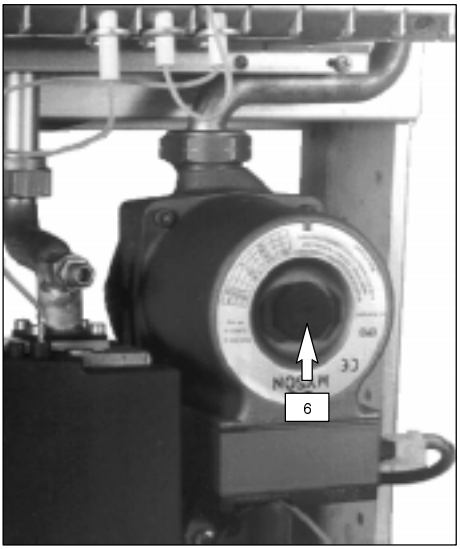

fig. 4.3

Continue filling the system. The actual reading should ideally be 1 bar and not less than 0,3 bar.

Close all air release valves on central heating system.

Inspect the system for water soundness and remedy any leaks discovered.

When the installation and filling are completed turn on the central heating system and run it until the temperature has reached the boiler operating temperature. The system must then be immediately flushed through.

The flushing procedure must be in line with BS7593: 1992 *Treatment of Water in Domestic Hot Water Central Heating Systems.*

This procedure must be repeated twice more.

During this operation we highly recommend the use of a central heating flushing detergent in the quantities as specified by the appropriate manufacturer, whose function it is to dissolve any foreign matter which may be in the system

The above operation could save the invalidation of your boilers guarantee and will also prevent problems which you may experience in the future if an inhibitory is not used.

4.5 Lighting the boiler

If external controls are fitted (e. g. Timeclock, room thermostat) ensure they "call for heat".

Switch on the mains electricity and turn the function switch as indicated in fig. 4.4A (combination boilers) or as in fig. 4.4B (central heating only boiler).

The green LED should be illuminated.

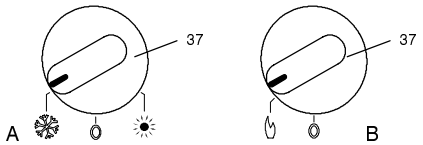

fig. 4.4

The boiler will now go through an ignition sequence and the burner will light.

If during the ignition attempt period the boiler falls to light, the full sequence control p.c.b. will go to lockout and the shut – down warning light will appears.

To reset the boiler depress the reset push button.

4.6 Checking the gas pressure at the burner

This boiler has been tested to the highest quality controls standards.

The maximum and minimum gas pressures are already pre – set during this quality control process.

It is therefore not normally necessary to undertake further adjustments however, a full explanation of pressure testing procedure is given below and the adjustment procedure is given in the service manual, *Gas Valve* section, if these operations are ever required.

Remove the front panel of the case and the control panel.

Loose the internal screw (9 in fig. 4.5) on the pressure test point for measuring outlet pressure at the gas valve and fit a pressure gauge using a hose;

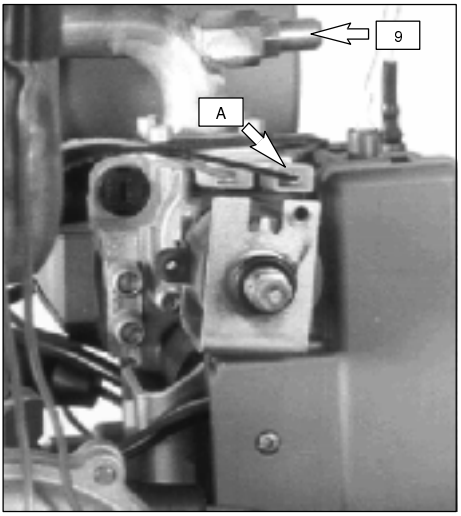

fig. 4.5

Switch on the boiler.

On the combined boilers open the hot water tap fully.

Set the d.h.w. temperature adjustment and the c.h. temperature adjustment to their maximum position.

Check the maximum gas pressure and compare the value on the manometer with the values indicated on the section *General – Technical data*

Check the maximum gas flow at the gas meter and compare with the values indicated on the section *General – Technical data*

turn off the electricity supply;

disconnect the gas modulator removing the connector A (fig. 4.5).

Switch on the boiler.

check the minimum gas pressure and compare the value on the manometer with the values indicated on the section *General – Technical data*

switch off the appliance and re–connect the line to the gas modulator;

close the domestic hot water cock.

4.7 Checking the flue system

The flue system should be visually checked for soundness. Check all clamps, gaskets and fixings are secure and tight.

To check the exhaust gas, remove the screw indicated and connect the analyzer to the exhaust gas sampling point (fig. 4.6).

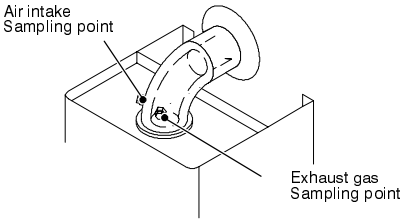

fig. 4.6

4.8 Checking the ignition device

With the burner on high flame close the gas cock.

about 10 seconds after, the shut–down warning light must appear.

To reset the boiler depress the reset push button (41 in fig. 4.7)

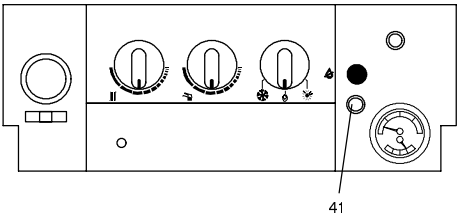

fig. 4.7

4.9 Adjusting the burner ignition

1 Turn off the boiler by means of the fused spur isolation switch provided with the appliance.

2 Make sure that the function switch (37) is set to the position in fig. 4.8A or fig. 4.8B and that the room thermostat, if fitted, is set to “heat demand”.

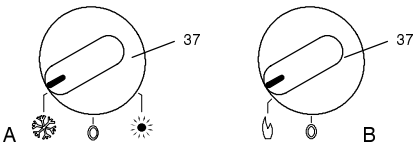

fig. 4.8

3 Unscrew the gas valve’s outlet pressure tap (9 in fig. 4.5) and connect a pressure gauge.

4 Loosen the two screws (fig. 4.9) and remove the cover of the control panel.

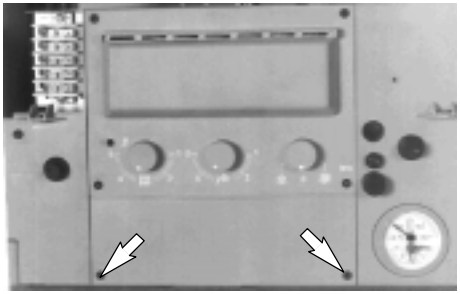

fig. 4.9

5 Turn on the boiler.

6 Check that the boiler lights up uniformly and adjust the flame height , if necessary.
To adjust the ignition, set dip–switch ”3” (fig. 4.10) to the OFF position and adjust potentiometer marked “ACC” with a screwdriver until correct lighting up is obtained (refer to tab. 4.1). Having finished this procedure, reset dip–switch ”3” to the ON position.

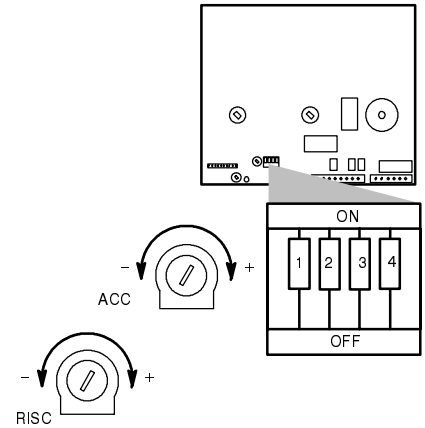

fig. 4.10

Ignition pressure		
Natural G20	Pa	600
	mbar	*6,0*
Butane G30	Pa	1 200
	mbar	*12,0*
Propane G31	Pa	1 300
	mbar	*13,0*

tab. 4.1

4.10 Adjustment of useful central heating output

Use a suitable screwdriver to turn the adjustment potentiometer marked “RISC” (fig. 4.10). Rotating the potentiometer anti–clockwise reduces the maximum supply current to the gas modulator device, and thus reduces the gas pressure to the burner.

Set the gas pressure according to the useful output chosen and adjust the gas flow rate according to fig. 4.11, fig. 4.12, and fig. 4.13.

Shut the cover of the control circuit board.

Close the pressure taps well and re–mount the case properly.

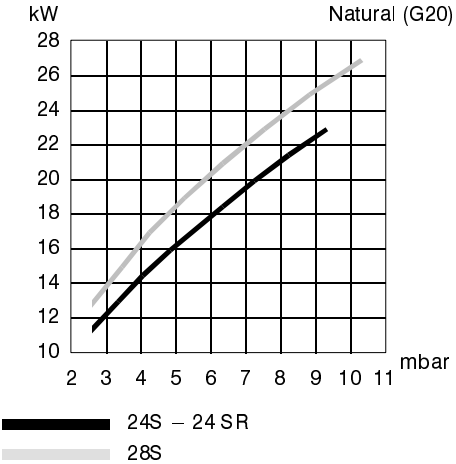

fig. 4.11

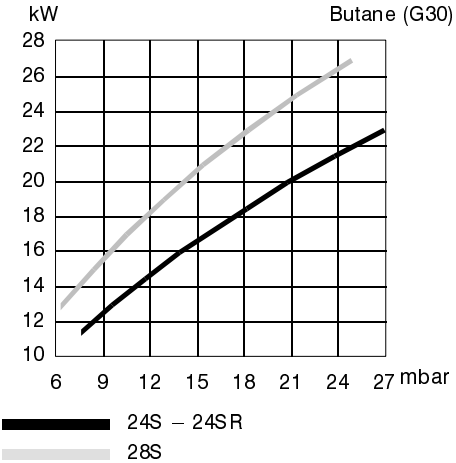

fig. 4.12

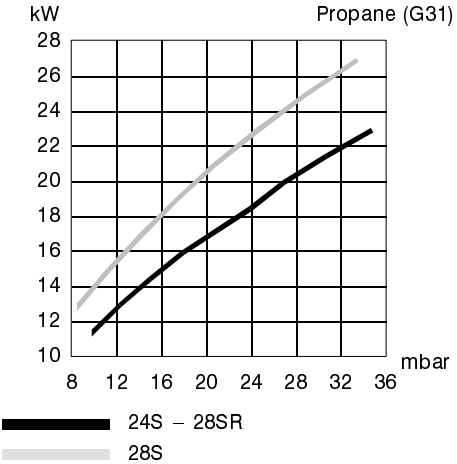

fig. 4.13

4.11 Instructing the user

Hand over the *User's instructions* supplied with the appliance and explain how to use the unit in both c.h. and d.h.w. modes;

take the User step by step through the lighting instructions;

show the User how to switch off the appliance quickly and indicate the position of the electric supply isolator;

explain the proper use and adjustment of all system controls; this will ensure the greatest possible fuel economy;

explain the function and use of the function switch;

explain and demonstrate the function of time and temperature controls (if fitted);

explain how to turn off the appliance for both short and long periods and advise on the precautions necessary to prevent damage should the appliance be inoperative when freezing conditions may occur;

finally, advise the User that, for continued safe and efficient operation, the appliance must be serviced by a competent person at least once a year.

5 GAS CONVERSION

5.1 Warnings

Procedures to adapt the boiler to the type of gas available **must be carried out** by a competent and responsible person.

Components used to adapt it to the type of gas available must be genuine parts only.

More detailed instructions, relating to the procedures for adapting the boiler to the type of gas available and subsequent calibration described below, are presented in the instruction leaflet for the conversion kit.

5.2 Procedures

1 Check that the gas cock (30 on page 3) fitted under the boiler is turned off and the appliance is not live.

2 Take off the front and left–hand side panels as shown in chapter *maintenance*, section 6.2 of this manual.

3 Take off the control panel.

4 Take off the removable side of the air–tight chamber.

5 Take the front panel of the combustion chamber off and remove the burner (16 on page 3).

6 Carry out the conversion for the type of gas, replacing the burner injectors (16 on page 3) correctly.

7 Re–assemble the burner (16 on page 3), the front panel of the combustion chamber and the removable side of the air–tight chamber.

8 Loosen the two screws (fig. 5.1) and remove the cover of the control panel.

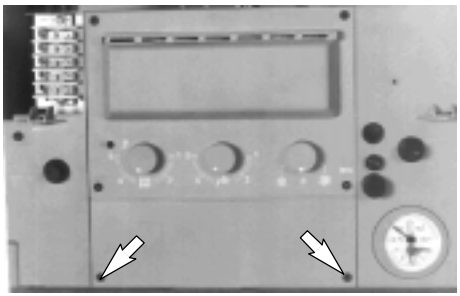

fig. 5.1

9 set correctly the dip–switch ”2” (fig. 5.2) in accordance with the following table.

Gas supply	Position of dip–switch n. 2
Natural gas	On
L.P.G.	Off

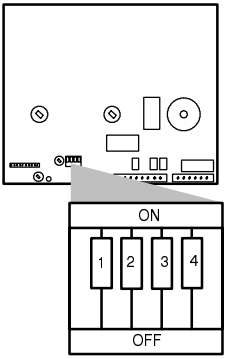

fig. 5.2

10 Calibrate the gas valve according to the instructions given in the leaflet included with the conversion kit.

11 Replace the the control circuit board cover, the front panel and the left–hand side panel of the case.

12 Stick a label indicating the type of gas, and the pressure level to which the appliance has been set, on the lower protection plate.
The self–adhesive label is included with the conversion kit.

6 MAINTENANCE

6.1 Warnings

The procedures detailed in this chapter **must be carried out only by a professionally qualified person.** Thus you are advised to contact an Authorised Service Centre.

For efficient and continuous operation of the boiler you are advised to have, at least once a year, maintenance and cleaning done by an Approved Service Centre engineer.

Isolate the appliance from the electricity supply by turning off the fused spur isolation switch fitted with the appliance and **turn off the gas** cock, before carrying out any procedures, whatsoever, for cleaning, maintenance, opening or dismantling boiler panels.

6.2 Dismantling the external panels

Front panel

1 Loosen the two screws "A". Bring the base of the panel far from the boiler and lift it, freeing it from the top hooks (fig. 6.1)

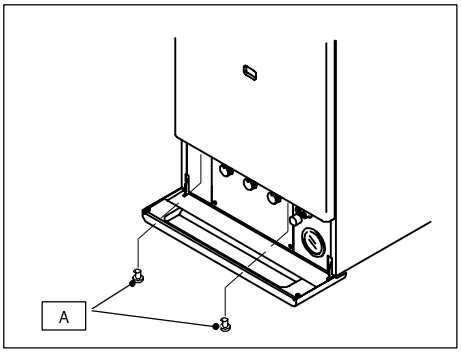

fig. 6.1

Side panels

2 Loosen the two screws "A" (fig. 6.2) and lift the panels freeing them from the side hooks.

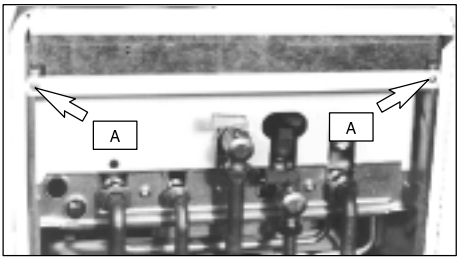

fig. 6.2

Lower protection plate

3 Slacken off screws "A" (fig. 6.2) and remove the lower protection plate.

6.3 Emptying the domestic hot water system (*Combination* boilers only)

1 Turn off the dcw inlet cock (31 in fig. 6.3) and turn on the "utilities" cocks.

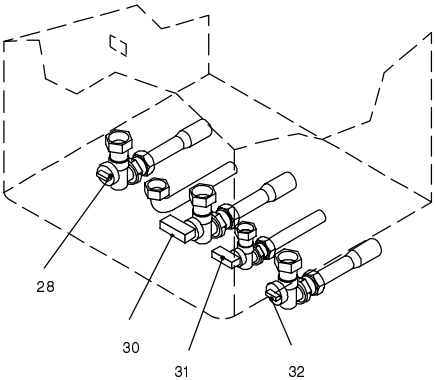

fig. 6.3

6.4 Emptying the central heating system

1 Turn off the c.h. cocks (28, 32 in fig. 6.3).

2 Turn off the central heating drain cock (13 in fig. 6.4).

3 To facilitate the downflow of water, remove the front panel, also remove the sealed chamber lid and loosen the nut of the automatic air bleed valve.

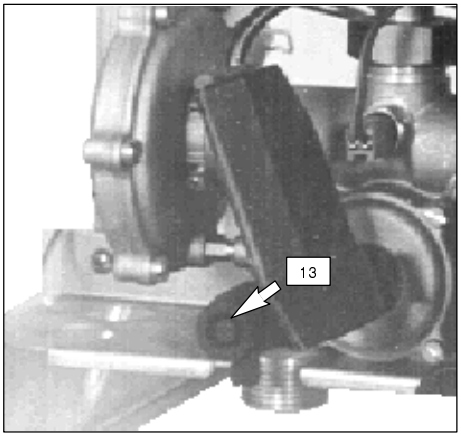

fig. 6.4

4 Tight it again once the emptying has been completed.

6.5 Cleaning the primary heat exchanger

Take off the front of the case, then the removable side of the air–tight chamber and the front panel of the combustion chamber.

If you notice dirt on the fins of the primary heat exchanger (19 on page 3), cover the sloping surfaces of the burner (16 on page 3) entirely in a protective layer (sheets of newspaper or similar). Brush out the primary heat exchanger (19 on page 3) with a bristle paintbrush.

6.6 Checking the pressurisation in the expansion tank

Empty the central heating system as described in section 6.4 of this chapter and check that the pressure in the expansion tank is not less than 1 bar.

If the pressure should be lower, take steps to correct the pressure level.

6.7 Cleaning the burner

The sloping and multi–gas type burner (16 on page 3) does not need special maintenance, but it is sufficient to dust it with a bristle paintbrush.

6.8 Checking the exhaust duct

Have the integrity of the exhaust fume duct (33 on page 3) air duct (34 on page 3), checked periodically, the venturi (2 on page 3) cleaned and the efficiency of the exhaust safety circuit checked at least once a year.

For all the above maintenance operations it is advisable to call an approved Service Engineer.

17962.0400.2 9802

BIASI U.K Ltd
Unit 32/33, Planetary Road
Industrial Estate, Neachelles Lane
Willenhall, Wolverhampton WV13 3XB

Wall hung, fan flue, room sealed gas boiler

SERVICE MANUAL

Models:	G.C. Appl. No.
24S	47 970 06
28S	47 970 07
24SR	41 970 03

Leave this manual adjacent to the gas meter

Biasi U.K. Ltd
Unit 32/33, Planetary Road
Industrial Estate, Neachells Lane
Willenhall, Wolverhampton WV 13 3XB
Tel: 01902 304 400

BIASI

Table of contents

1 Overall information 1
1.1 Overall View 1
1.2 Hydraulic diagram 1

2 General access and emptying hydr. circuits 2
2.1 Nomenclature 2
2.2 Body panels 2
2.3 Control panel 2
2.4 Access to the electric parts of the control panel 3
2.5 Access to the sealed chamber 3
2.6 Emptying the main circuit 3
2.7 Emptying the d.h.w. circuit 4

3 Diagrams 5
3.1 Wiring diagram 5
3.2 Functional flow diagrams 6
3.3 Control circuit voltages 8

4 Fault finding 9

5 Main heat exchanger 12
5.1 Characteristics 12
5.2 Removal 12
5.3 Cleaning 12

6 D.h.w. heat exchanger 13
6.1 Function 13
6.2 Removal 13

7 Pump 14
7.1 Function 14
7.2 Checks 14
7.3 Removal 14

8 Diverter valve and d.h.w. pressure switch . 15
8.1 Function 15
8.2 Checks 15
8.3 Removal 15

9 Electronic control circuit 18
9.1 Function 18
9.2 Selection and adjustment devices 18
9.3 Checking the temperature 18
9.4 Function selectors 19
9.5 Ignition gas pressure regulator 20
9.6 Max. c/h power regulator 20
9.7 Checks 20
9.8 Removal of the control circuit 20
9.9 Thermal control in the ”winter” mode . . . 21
9.10 Thermal control in the ”summer” mode . 21

10 Full sequence ignition device 22
10.1 Function 22
10.2 Checks 22
10.3 Removal 22
10.4 Ignition sequence 23

11 Gas valve 24
11.1 Function 24
11.2 Nomenclature of the parts 24
11.3 Adjustment 24
11.4 Checks 24
11.5 Removal 25

12 Main circuit flow switch 26
12.1 Function 26
12.2 Checks 26
12.3 Removal 26

13 D.h.w. filter and flow limiter 28
13.1 General notes 28
13.2 Removal of the filter 28
13.3 Flow limiter 28

14 Temperature probes 29
14.1 Function 29
14.2 Checks 29
14.3 Removal 29

15 By–pass valve 31
15.1 Function 31
15.2 Removal 31

16 Flue fan, venturi, air pressure switch 32
16.1 Function 32
16.2 Checks 32
16.3 Removal of the fan 33
16.4 Removal of the air pressure switch 33

17 Ignition and detection electrodes 34
17.1 Function 34
17.2 Checks 34
17.3 Removal 34

18 Safety thermostat 35
18.1 Function 35
18.2 Checks 35
18.3 Removal 36

19 Short spare parts list 38

1 Overall information

1.1 Overall View

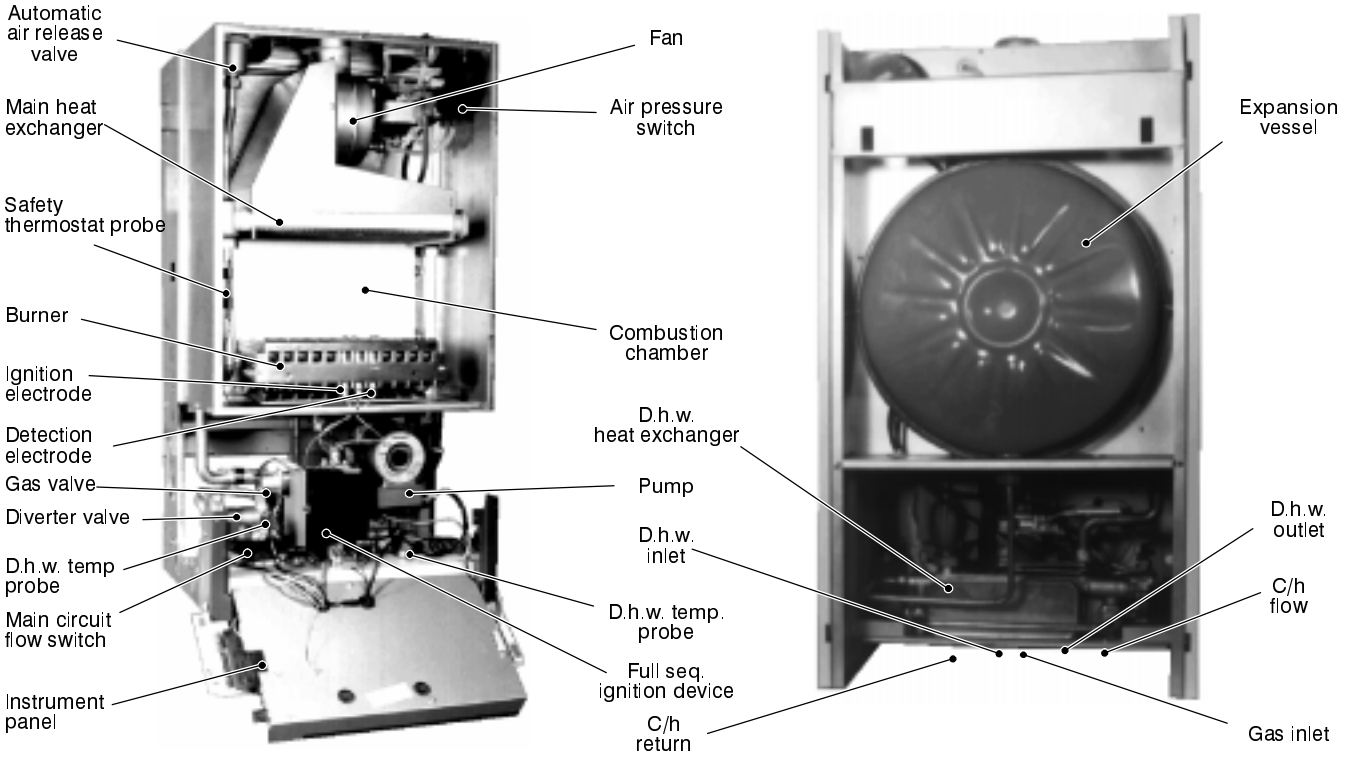

fig. 1

1.2 Hydraulic diagram

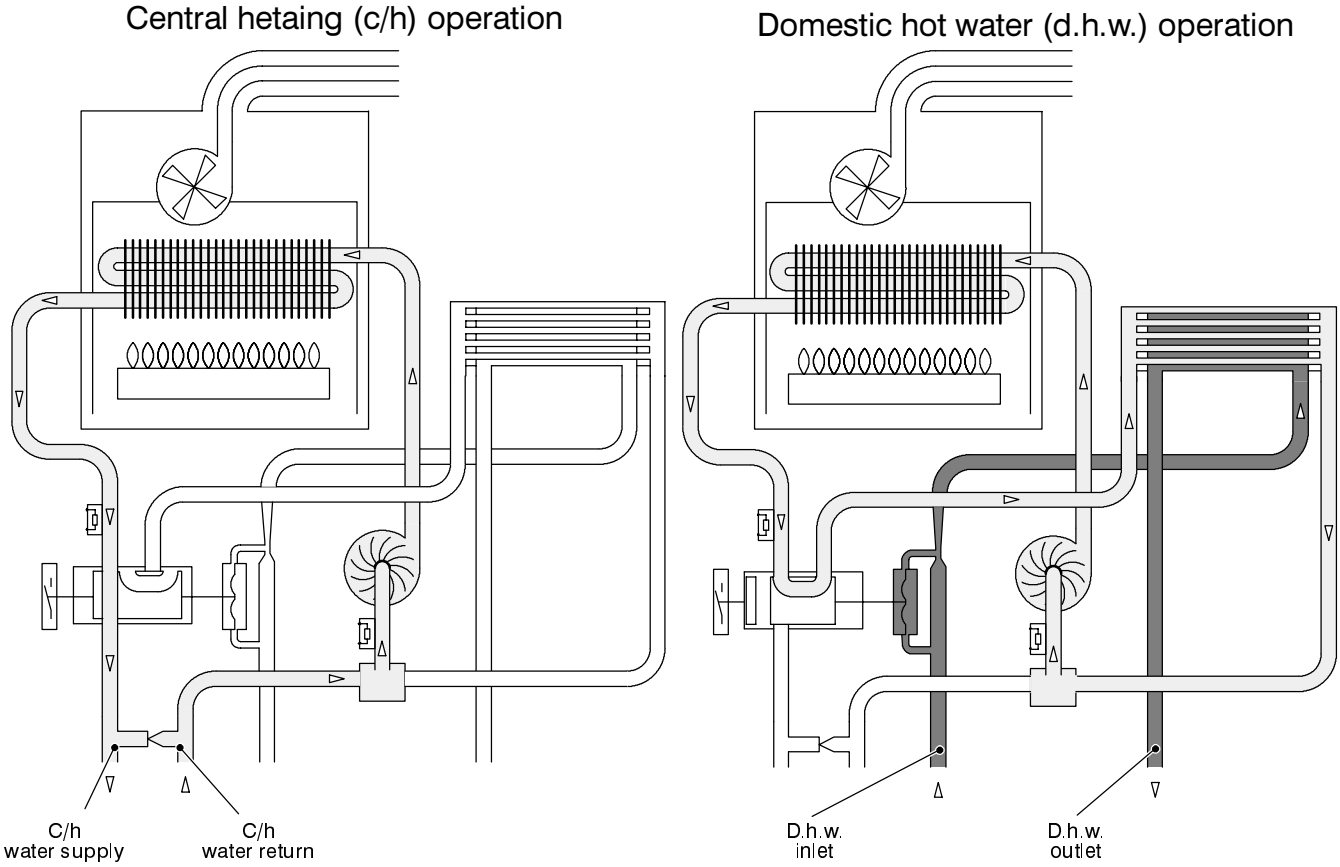

fig. 2

2 General access and emptying hydraulic circuits

2.1 Nomenclature

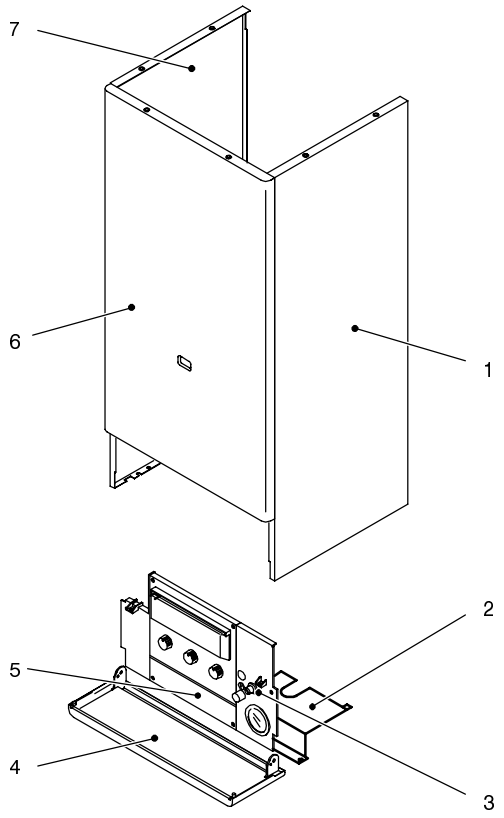

fig. 3

1 Right side panel
2 Lower protection plate
3 Instrument panel
4 Control – panel cover
5 Service panel
6 Front panel
7 Left side panel

2.2 Body panels

Warning: isolate the boiler from the mains electricity supply before removing any covering or component.

For the most part of the check and maintenance operations it is necessary to remove one or more panels of the body.

The side panels can be removed only after the removal of the front panel.

To remove the front panel remove screws *A* (fig. 4), bring the base of the panel far from the boiler and lift it, freeing it from the top hooks.

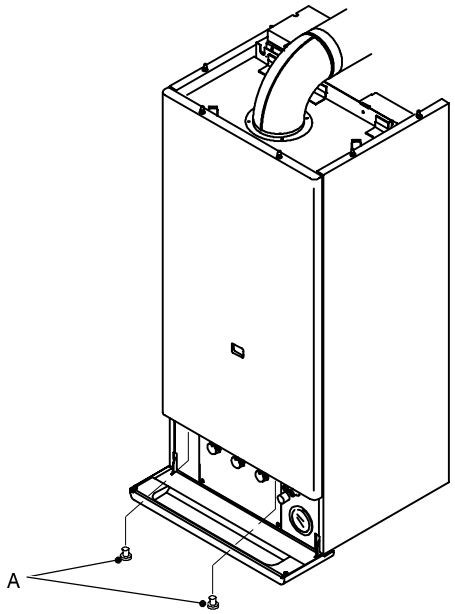

fig. 4

To remove the side panels bring the base of the panels far from the boiler and lift them, freeing them from the side hooks.

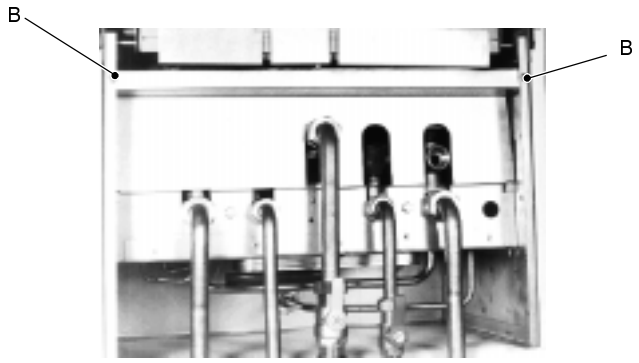

fig. 5

To remove the lower protection loosen the screws *B* (fig. 5).

2.3 Control panel

To gain access to the parts located behind the instrument panel proceed as follows:

1 Remove the front panel of the body

2 Remove the two screws *C* (fig. 6) and lower the instrument panel.

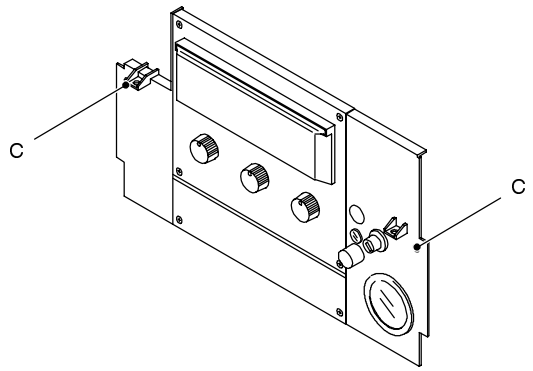

fig. 6

2.4 Access to the electric parts of the control panel

Warning: isolate the boiler from the mains electricity supply before removing any covering or component.

○ To remove the service panel ”5”:

Remove the two screws *D* and remove the service panel (fig. 7);

○ To gain access to the electronic regulation PCB

Remove the four screws *E* and remove the controls panel (fig. 7);

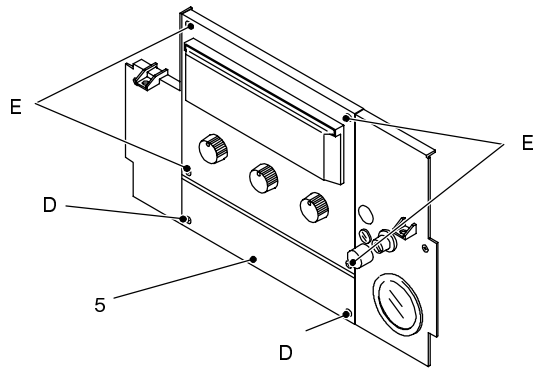

fig. 7

○ To gain access to the thermostats and other electric parts (rear side of the panel);

1 Remove the front panel of the body and lower the instrument panel.

2 Remove the four screws *F* (fig. 8) and remove the metallic cover.

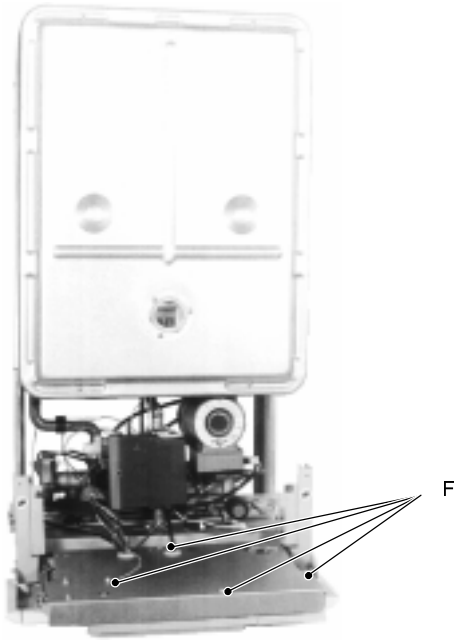

fig. 8

2.5 Access to the sealed chamber

To gain access to the parts contained in the sealed chamber it is necessary to remove the cover of the sealed chamber.

For this purpose, remove the front panel of the body, remove the screws *G* as indicated in fig. 9.

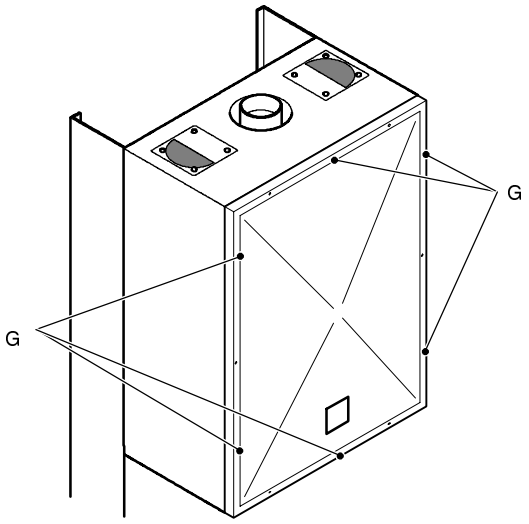

fig. 9

2.6 Emptying the main circuit

1 Close the c/h circuit isolation valves.

2 Open the draining tap *H* (fig. 10) until the boiler is completely emptied.

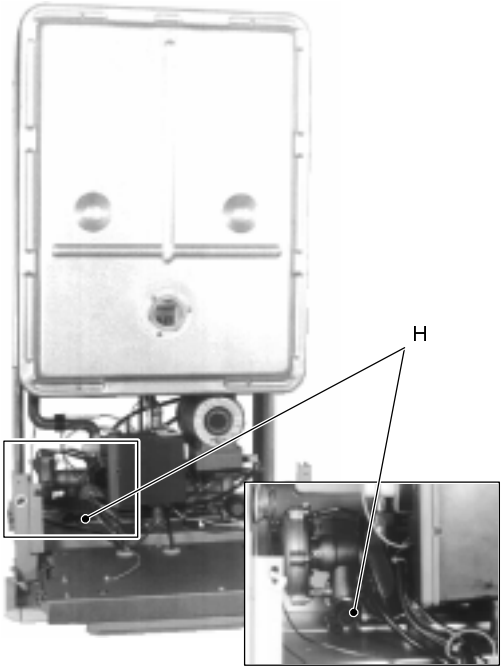

fig. 10

To facilitate the downflow of water, remove the front panel, also remove the sealed chamber lid and loosen the nut *I* (fig. 11) of the automatic air bleed valve
Tight it again once the emptying has been completed.

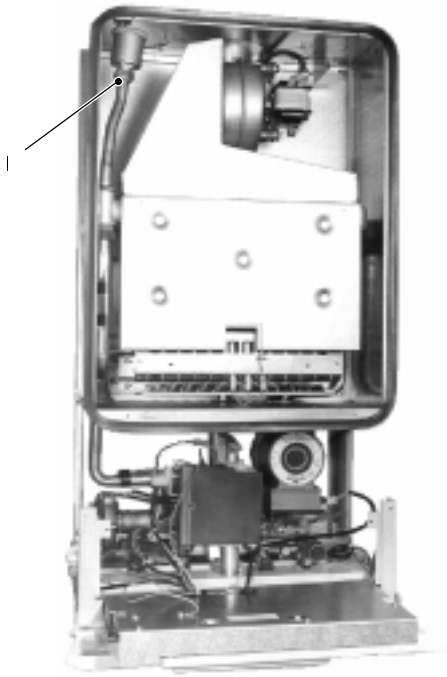

fig. 11

2.7 Emptying the d.h.w. circuit

1 Remove the lower protection of the boiler;
2 Close the d.h.w. circuit cut–off valve *J* (fig. 12);
3 Open one or more hot water taps of the plant until the boiler has been completely emptied.

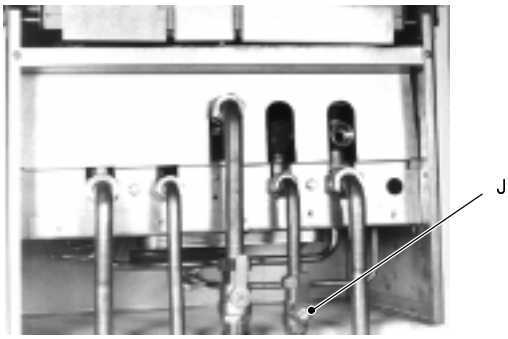

fig. 12

3 Diagrams

3.1 Wiring diagram

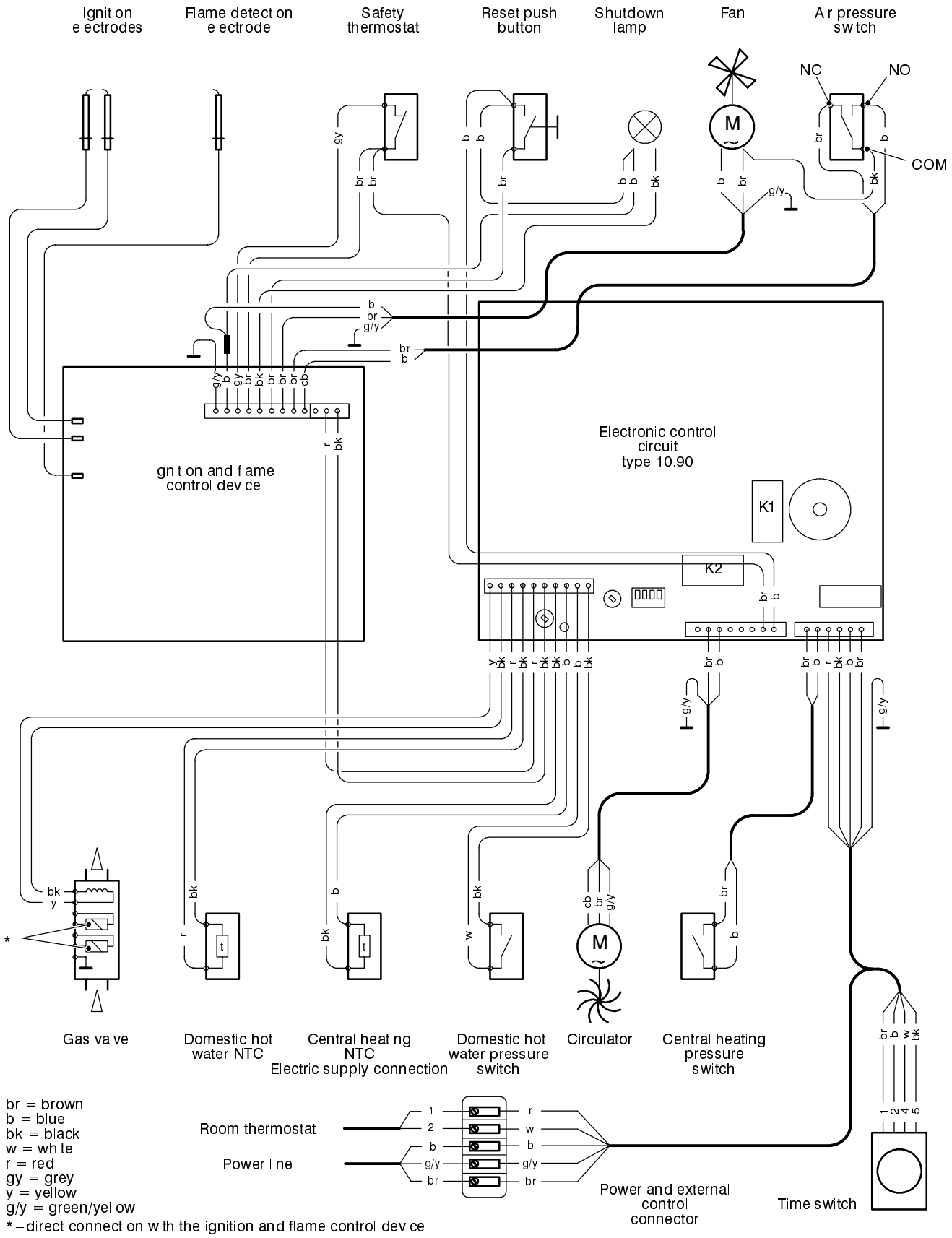

3.2 Functional flow diagrams

General layout
function switch position off

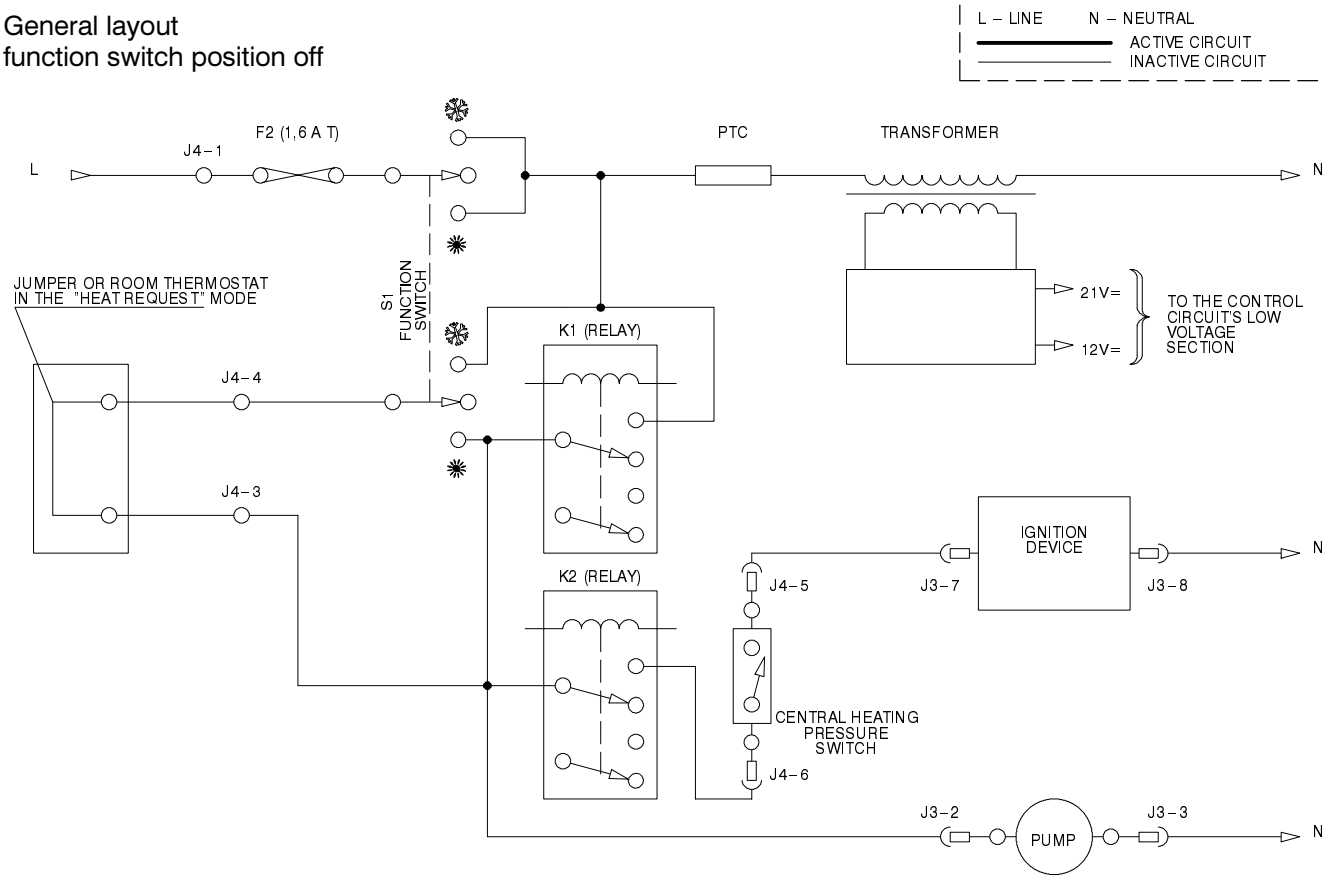

Function switch position ❄
Heat request on c/h

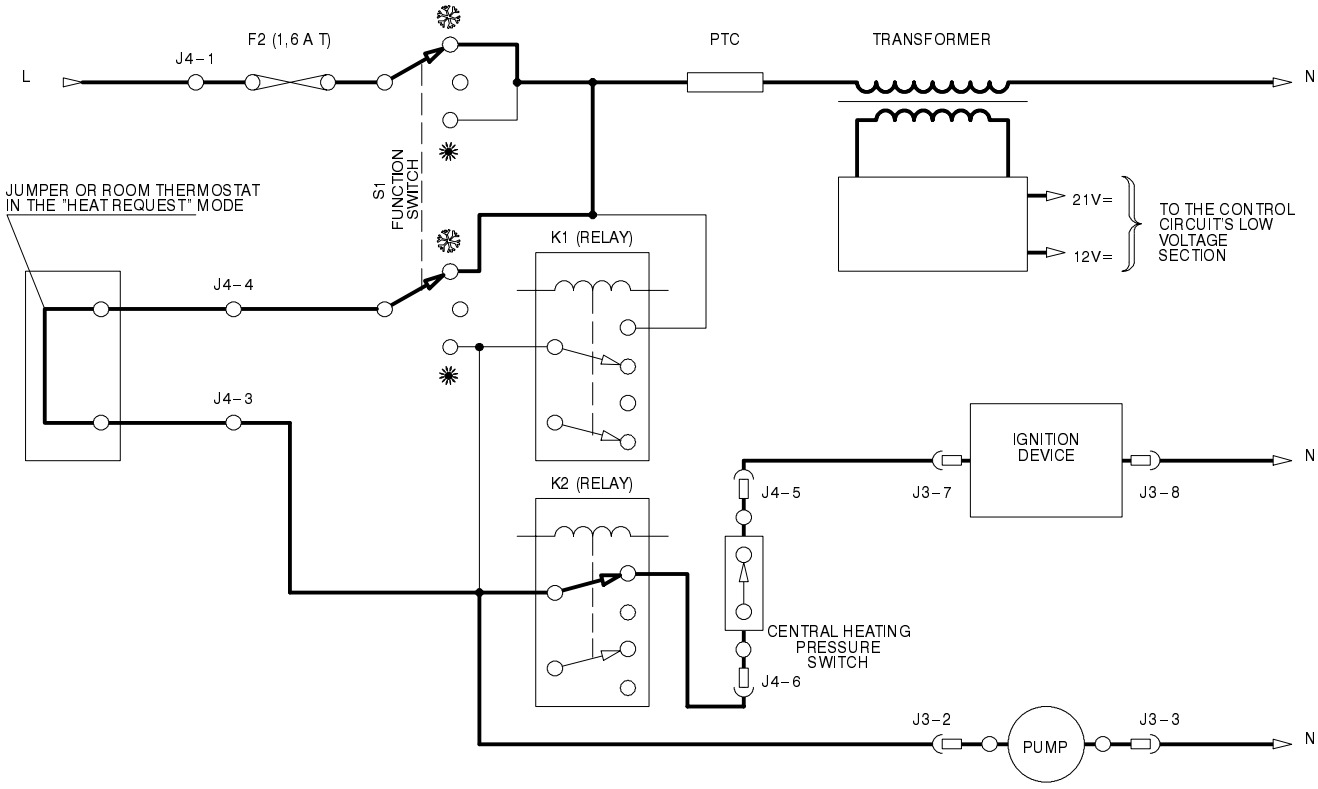

Function switch position ❄
Heat request on d.h.w.

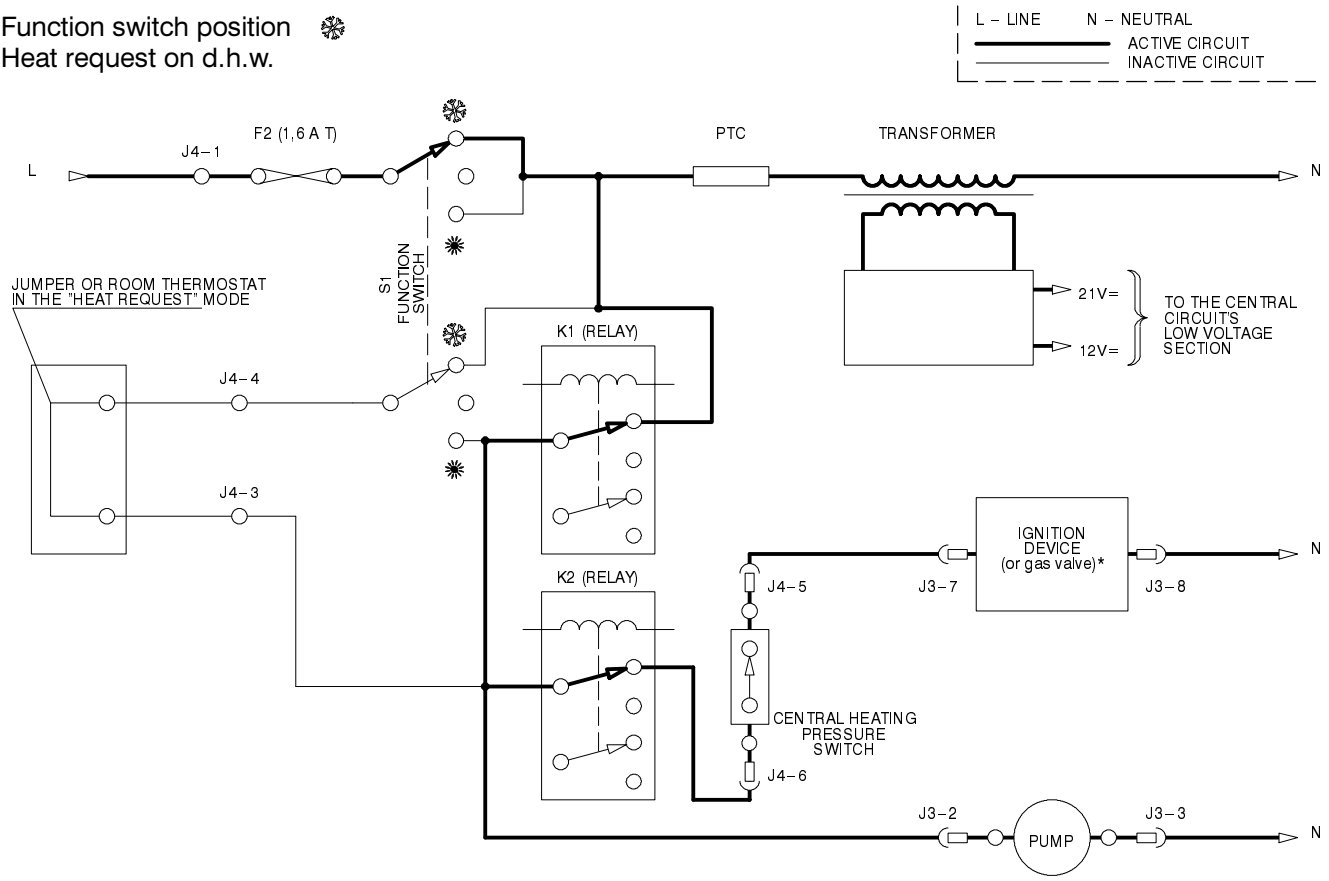

Function switch position ✳
Heat request on d.h.w.

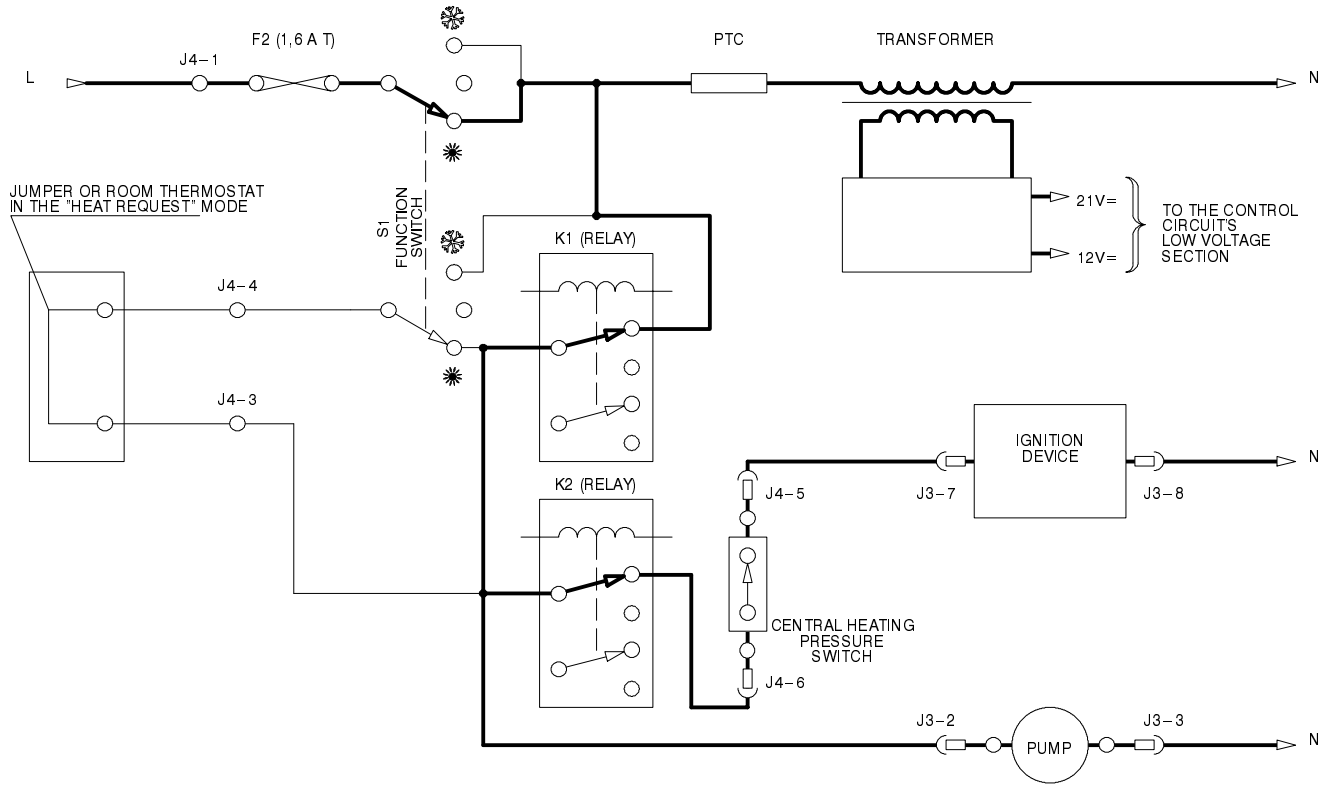

3.3 Control circuit voltages

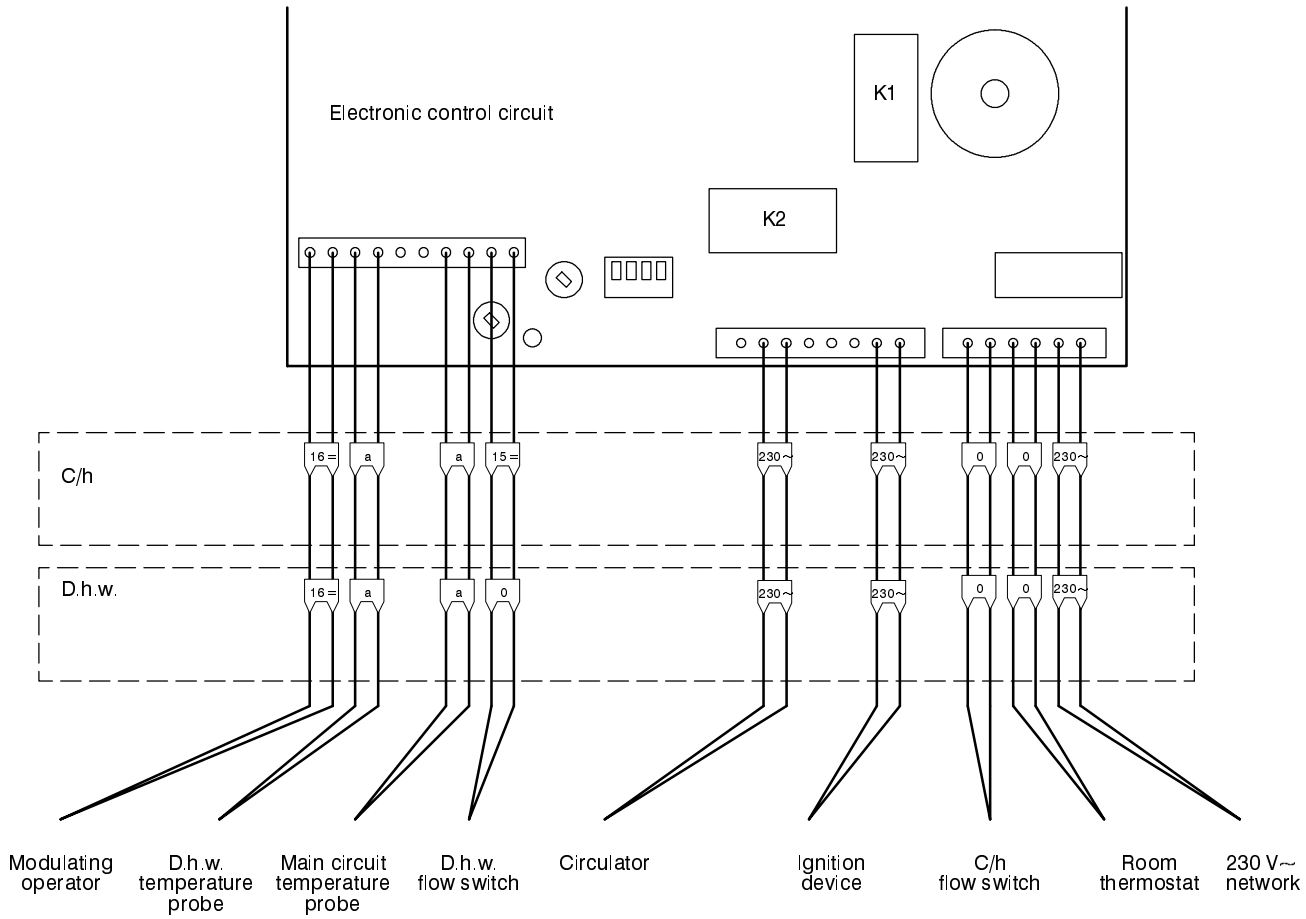

a: never zero (short circuit) never 12V= (open circuit)

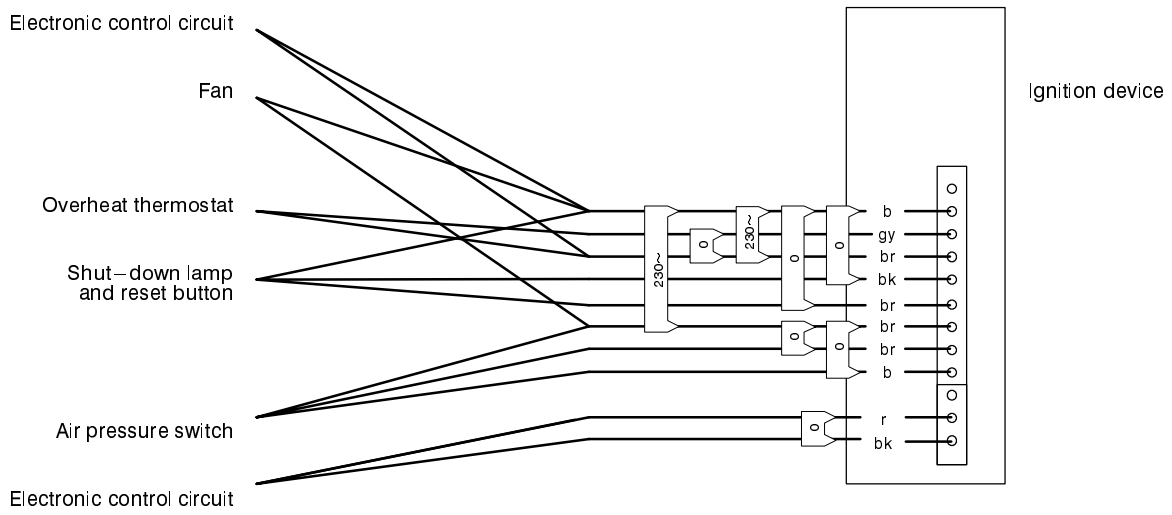

Electrical voltages in Volts during normal operation with burner on at maximum power

4 Fault finding

	Components to check																														
Section of the manual → (note ref. in brackets)	– (1)	– (2)	– (3)	– (4)		6	7.2		8.2			9.7			10.2	11.4		12.2	13.2	14.2		15	16.2		17.2		18.2	– (7)	– (8)	–	–
Defect ↓	Power supply line	Gas supply line	Flue pipes	C.h. circuit	D.h.w. circuit	D.h.w. heat exchanger	Pump (windings)	Pump (rotor – impeller)	Diverter valve (membrane)	Diverter valve (deviation group)	D.h.w. pressure switch	Fuse (regulation p.c.b.)	Regulation p.c.b.	Function selectors (reg. p.c.b)	Full sequence device	Gas valve (on–off operators)	Gas valve (modulating operator)	Main circuit flow switch	D.h.w. filter	Main circuit temp. probe	D.h.w. temp. probe	By–pass valve	Fan and venturi device	Air pressure switch	Ignition electrode	Detection electrode	Safety thermostat	Injectors	Expansion vessel	Safety valve	Pressure gauge
The boiler does not start either in c/h or d.h.w. mode. Fan still. Instrument panel light (green) **off**. Lockout lamp (red) **off**.	■											■	■																		
The boiler does not start either in c/h or d.h.w.. mode. Fan still. Instrument panel light (green) **on**. Lockout lamp (red) **off**.				■	■		■	■							■			■		■		■ (5)	■	■			■				
Lockout lamp (red) **on**. By pressing the reset push–button the boiler turns on and operates correctly.		■															■ (6)								■			■			
Lockout lamp (red) **on**. By pressing the reset push–button the boiler starts the ignition cycle. The burner **lights on** , the ignition sparks continue and the boiler locks again.	■	■													■											■		■			
Lockout lamp (red) **on**. By pressing the reset push–button the boiler starts the ignition cycle. The burner **doesn't light on** , the ignition sparks continue and the boiler locks again.		■	■										■			■				■	■		■	■	■						
The boiler runs but the combustion is noisy and there is flame lift effect.			■																												
Incorrect modulation													■	■			■														
The boiler switches on and off the burner to a fixed gas pressure													■	■			■														

	Components to check																														
Section of the manual → (note ref. in brackets)	– (1)	– (2)	– (3)	– (4)		6	7.2		8.2			9.7			10.2	11.4		12.2	13.2	14.2		15	16.2		17.2		18.2	– (7)	– (8)	–	–
Defect ↓	Power supply line	Gas supply line	Flue pipes	C.h. circuit	D.h.w. circuit	D.h.w. heat exchanger	Pump (windings)	Pump (rotor – impeller)	Diverter valve (membrane)	Diverter valve (deviation group)	D.h.w. pressure switch	Fuse (regulation p.c.b.)	Regulation p.c.b.	Function selectors (reg. p.c.b)	Full sequence device	Gas valve (on–off operators)	Gas valve (modulating operator)	Main circuit flow switch	D.h.w. filter	Main circuit temp. probe	D.h.w. temp. probe	By–pass valve	Fan and venturi device	Air pressure switch	Ignition electrode	Detection electrode	Safety thermostat	Injectors	Expansion vessel	Safety valve	Pressure gauge
The boiler fires on c/h and d.h.w. for a few seconds, goes off and fires again constantly.	■		■	■			■	■									■	■					■								
The fan turns but the boiler does not turn on.			■												■								■	■							
The boiler turns off immediately,drawing d.h.w. Regular functioning in c/h													■								■										
Noisy boiler			■																				■								
With the function switch in summer or winter mode the boiler turns on even without drawing the d.h.w. and the main circuit temperature is kept at about 90°C. The pump runs continuously. The c/h system does not heat. The boiler operates correctly in d.h.w. mode.									■	■	■								■												
The boiler does not supply d.h.w. (cold water from the tap). Regular operation in c/h mode even during a drawing off d.h.w.									■	■	■		■																		
On c/h mode the temperature of the main circuit reaches 90°C and the c/h system does not heat. The boiler operates correctly on d.h.w. mode.									■	■			■																		
The boiler operates correctly but the gas pressure to the burner remains at minimum.													■				■														
Poor d.h.w. temperature		■				■				■			■				■		■ (9)												
Low flow rate of d.h.w.					■	■													■												

	Components to check																														
Section of the manual → (note ref. in brackets)	– (1)	– (2)	– (3)	– (4)		6	7.2		8.2			9.7			10.2	11.4		12.2	13.2	14.2		15	16.2		17.2		18.2	– (7)	– (8)	–	–
Defect ↓	Power supply line	Gas supply line	Flue pipes	C.h. circuit	D.h.w. circuit	D.h.w. heat exchanger	Pump (windings)	Pump (rotor – impeller)	Diverter valve (membrane)	Diverter valve (deviation group)	D.h.w. pressure switch	Fuse (regulation p.c.b.)	Regulation p.c.b.	Function selectors (reg. p.c.b)	Full sequence device	Gas valve (on–off operators)	Gas valve (modulating operator)	Main circuit flow switch	D.h.w. filter	Main circuit temp. probe	D.h.w. temp. probe	By–pass valve	Fan and venturi device	Air pressure switch	Ignition electrode	Detection electrode	Safety thermostat	Injectors	Expansion vessel	Safety valve	Pressure gauge
Water leaks from the safety valve during operation on c/h				■																									■	■	■
Water leaks from the safety valve when the boiler is off.																													■	■	■

Note

1 Check for 220–240V~ between line (L) and neutral (N)
Verify the integrity of supply cable, plug and external fuses.
Check the polarity of line and neutral connection

2 Verify the soundness of the gas supply pipe, the position of stop valves.
Check the gas pressure at the inlet test point of the gas valve (see sect. 11.3) with the boiler at rest and during operation and compare it with the values given on the installation booklet.

3 Check for soundness and absence of obstructions. Verify that the flue terminal is correctly installed (see clearances) and ensure that exhaust gas is not sucked back by the boiler.

4 Check for soundness of the circuit and verify its correct filling (see also installation manual).

5 A jammed by–pass could cause the over–heating of the main circuit and the intervention of the safety thermostat.

6 Check the **minimum** gas pressure at the outlet test point of the gas valve (see sect. 11.3) and compare it with the value given on the installation booklet.

7 Verify the cleanness of injectors.

8 Check the pressurization of the expansion vessel. Refer to the installation manual for proper values.

9 d.h.w. pressure too high or flow rate too high. If necessary insert a flow rate limiter (13.3).

5 Main heat exchanger

5.1 Characteristics

The main heat exchanger (*A* in fig. 13) has the function of transferring heat of the gas produced by combustion to the water circulating in it.

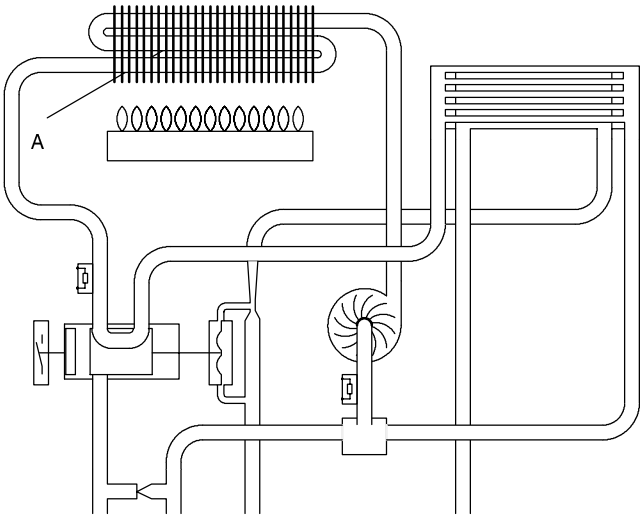

fig. 13

The hydraulic circuit consists of five elliptic pipes connected together in series (fig. 14).

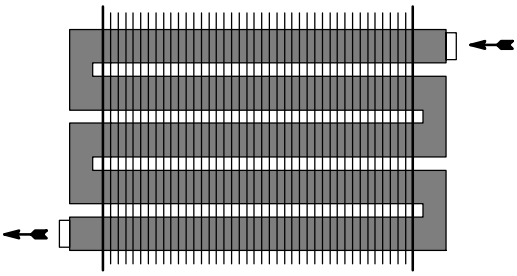

fig. 14

5.2 Removal

Warning: isolate the boiler from the mains electricity supply before removing any covering or component.

1 Empty the main circuit of the boiler

2 Remove the front panel of the body

3 Remove the sealed chamber cover.

For models 24S 24SR...

4a Remove the cover of the combustion chamber;

5a Remove the front part of the flue gas hood by unscrewing the screw *B* (fig. 15a)

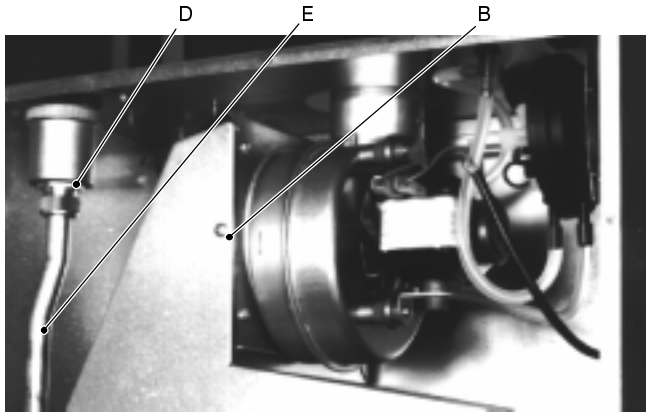

fig. 15a

For model 28S...

4b Remove the front part of the flue gas hood by unscrewing the four screws *C* (fig. 15b)

5b Remove the cover of the combustion chamber

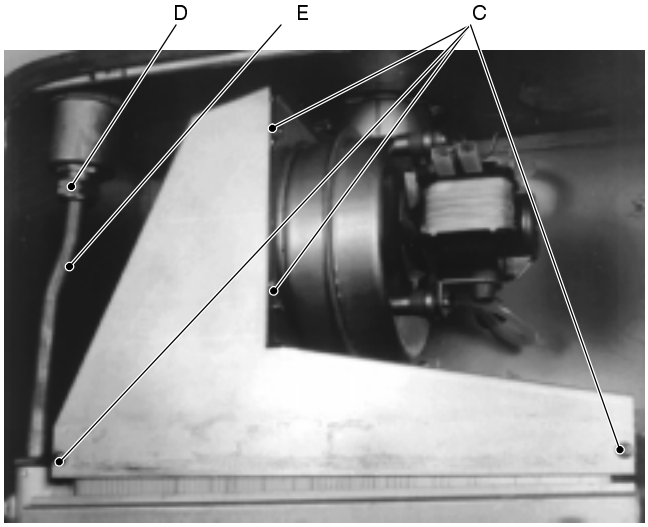

fig. 15b

6 Unscrew the automatic air valve connection nut *D* and remove the valve (fig. 15a);

7 Separate the heat exchanger from the hydraulic circuit, loosening the inlet and outlet pipe fittings);

For models 24S 24SR...

8a move the right pipe and free the right connection; lower the right side of the exchanger and extract it from the front;

For model 28S...

8b Extract the heat exchanger, from the front;

9 Unscrew the pipe *E* (fig. 15b) from the heat exchanger;

10 Assemble the heat exchanger carrying out the removal operations in reverse sequence.

5.3 Cleaning

If there are deposits of soot or dirt between the blades of the heat exchanger, clean with a brush or non–metallic bristle brush.

In any case, avoid any actions that can damage the protective varnish with which the exchanger has been covered.

6 D.h.w. heat exchanger

6.1 Function

The d.h.w heat exchanger (*A* in fig. 16) allows the instantaneous transferral of heat from the primary hydraulic circuit to the water destined for d.h.w use.

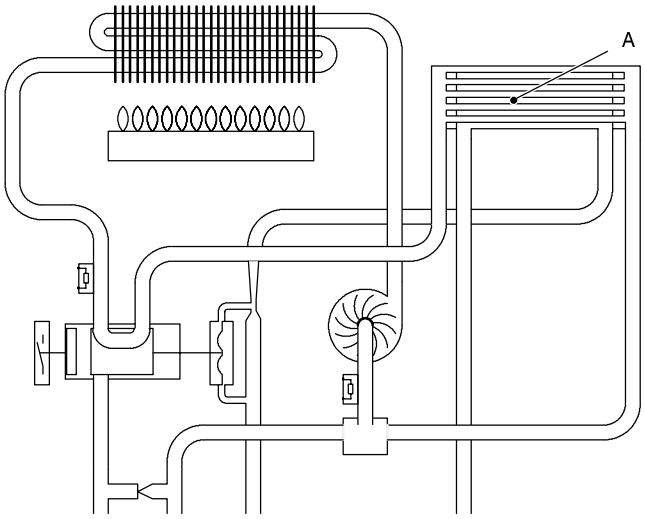

fig. 16

The schematic structure is shown in fig. 17.

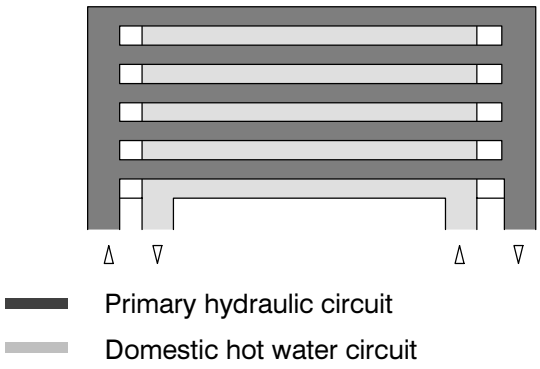

fig. 17

6.2 Removal

Warning: isolate the boiler from the mains electricity supply before removing any covering or component.

1 Empty the primary circuit and the d.h.w circuit of the boiler

2 Remove the front panel of the body and lower the instrument panel

3 Completely unscrew the two screws *B* (in fig. 18 the right one is shown) which hold the exchanger to the brass deviator groups;

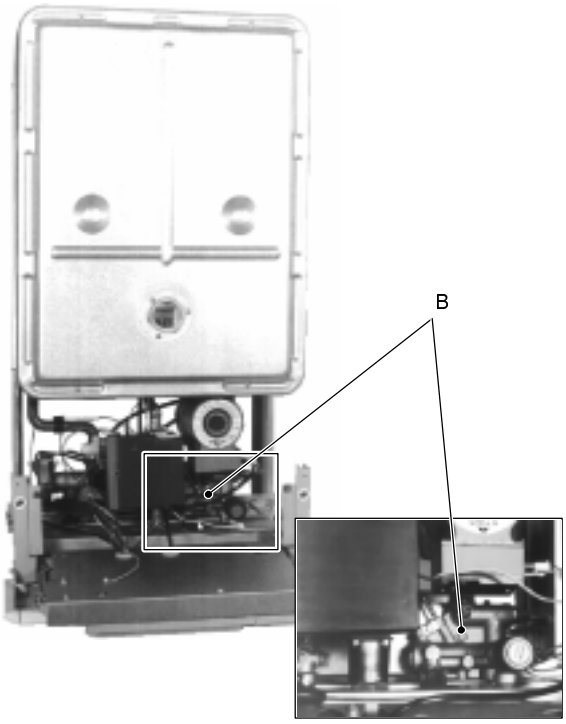

fig. 18

4 Move the exchanger towards the rear side of the boiler and extract it.

Reassemble the d.h.w. heat exchanger carrying out the removal operations in the reverse order.

Attention. Reassembling the exchanger be sure to put the off center location/securing pin indicated in fig. 19 towards the left side of the boiler.

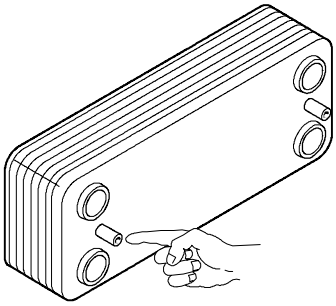

fig. 19

7 Pump

7.1 Function

The pump (*A* in fig. 20) has the function of making the water in the main circuit circulate through the main heat exchanger and therefore through the c/h system (during the c/h function) or through the secondary heat exchanger (during the d.h.w. function).

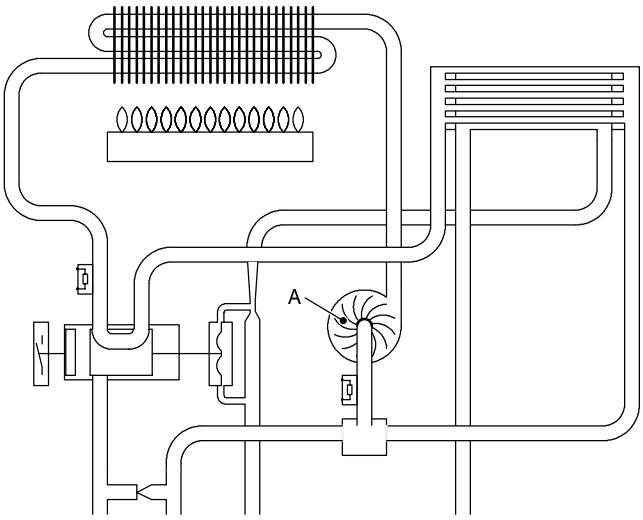

fig. 20

7.2 Checks

Warning: isolate the boiler from the mains electricity supply before removing any covering or component.

Check that the pump is not seized and that the movement of the rotor is not subject to mechanical impediments.

With the boiler off, remove the front panel and lower the instrument panel. Remove the air release plug of the pump and turn the rotor with a screwdriver.

Check the electrical completeness.

Remove the service panel, disconnect the connector to the electronic control circuit (see electrical diagram) and measure the electrical resistance between the pump supply conductors. (fig. 21).

Electrical resistance of the windings (at ambient temperature) on switch position 3 must be about:

210 Ω – Myson CP53
180 Ω – Myson CP63 (high head alternative)
220 Ω – Salmson MYE30
120 Ω – Salmson MYL50 (high head alternative)

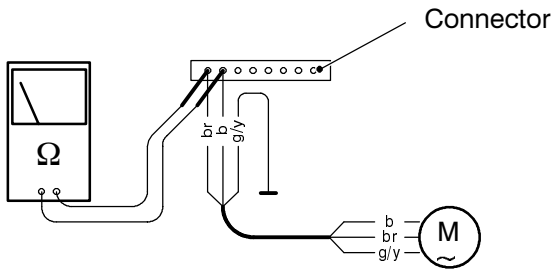

fig. 21

Check the absence of starting defects.

With the boiler off remove the front panel, lower the instrument panel

for Myson pump: unscrew the plug of the pump by hand (the plug cannot be removed). Pull it and turn the rotor. Start the boiler and verify if the motor runs.

for Salmson pump (high head alternative): remove the air release screw of the pump. Start the boiler and with a screwdriver, have the rotor turn in the direction of the arrow. If there is a defect in starting, the rotor will begin to turn normally only starting it manually.

Check that the impeller is integral with the rotor.

Remove the pump head loosing the screws which hold it to the pump body and check that the impeller is firmly jointed with the rotor.

7.3 Removal

Warning: isolate the boiler from the mains electricity supply before removing any covering or component.

If the clearance to the right side of the boiler is restricted, the removal of the pump can be easily achieved by first removing the head by unscrewing the four Allen keys screws (B in fig. 22, the two on the upper side indicated).

1 Empty the main circuit of the boiler.

2 Remove the front panel of the body, the right side panel and overturn the instrument panel.

3 Disconnect the connector *C* (fig. 22).

4 Completely unscrew the connection nuts *D* and remove the pump.

5 Before the reassembling, carefully clean the support seat of the gasket.

6 Reassemble the pump carrying out the removal operations in the reverse order.

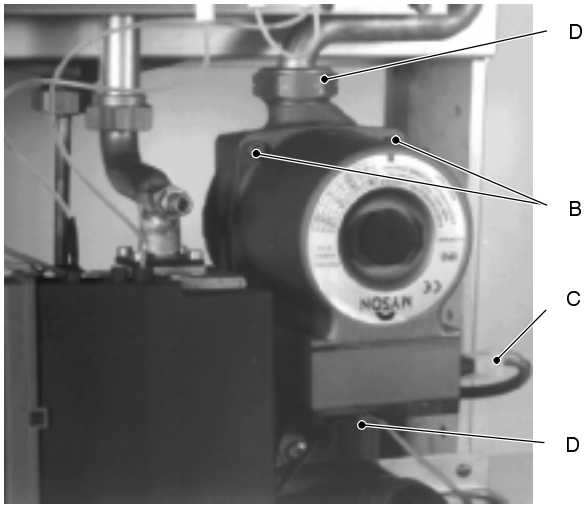

fig. 22

8 Diverter valve and d.h.w. pressure switch

8.1 Function

The diverter valve (*A* in fig. 23) has the function of modifying the hydraulic circuit of the boiler by means of an hydraulic command given by the opening of a d.h.w. tap in order to send the water that exits the main heat exchanger towards the c/h system or towards the d.h.w. heat exchanger.

Moreover it operates the d.h.w. pressure switch which acts on the electronic control circuit.

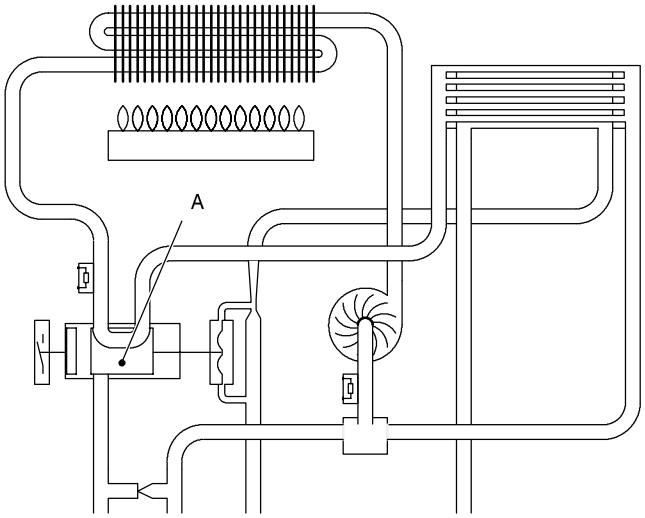

fig. 23

8.2 Checks

General check

It is possible to verify the general operation of the valve by measuring the voltage between the leads of the d.h.w. pressure switch during the operation on c/h and d.h.w.

Warning: isolate the boiler from the mains electricity supply before removing any covering or component.

1 Switch off the boiler and open the service panel.

2 Connect a meter, set for direct voltage measurement, to the points indicated in fig. 24.

3 Switch the boiler on ❄ position and verify the voltages during c/h and d.h.w. by matching the readings with the values indicated in the section 3.3.

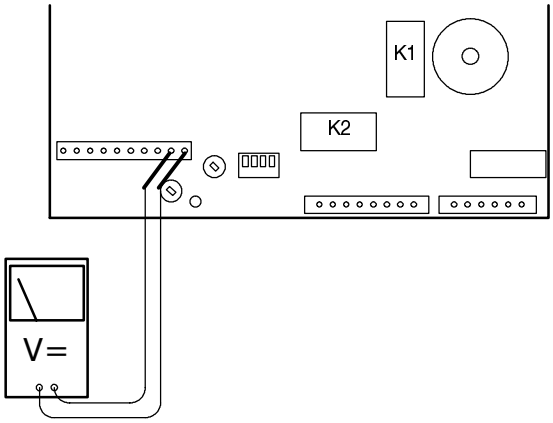

fig. 24

Check the mechanical function

1 Switch off the boiler; remove the front panel of the case, the lower protection plate and lower the control panel.

2 Remove the pressure switch as explained in the section 8.3 *"Removal of the switch".*

3 Open and close a d.h.w. tap and verify the position of the shaft *B* referring to fig. 25.

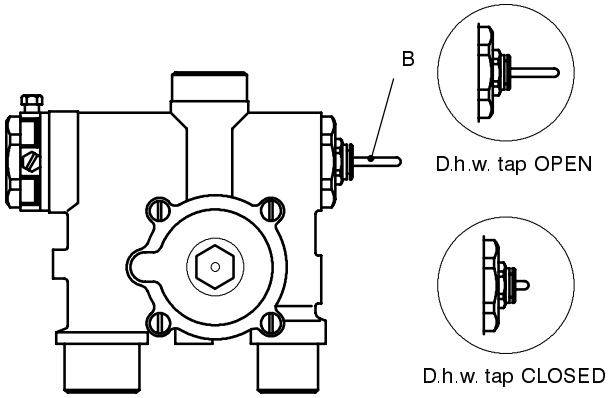

fig. 25

8.3 Removal

Warning: isolate the boiler from the mains electricity supply before removing any covering or component.

Removal of the membrane

1 Remove the front panel of the case, lower the control panel and empty the d.h.w. circuit.

2 Remove the forks *C* and move away the pipes *D*. (fig. 26 – rear view of the boiler).

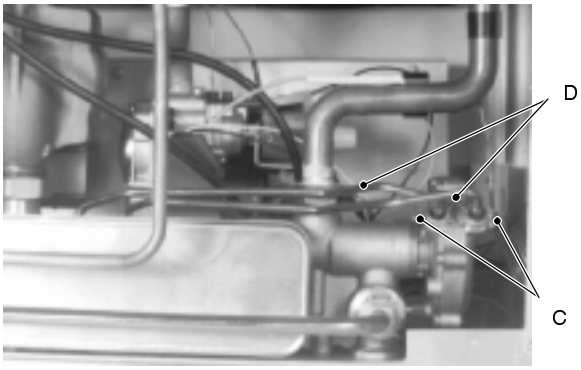

fig. 26

3 Loose the screws *E* and remove the hydraulic actuator *F* (fig. 27).

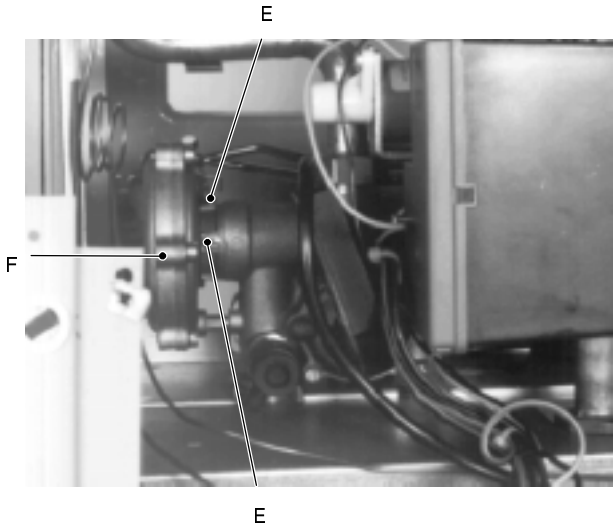

fig. 27

4 Unscrew the six screws *G*, open the hydraulic actuator and remove the membrane *H*. (fig. 28).

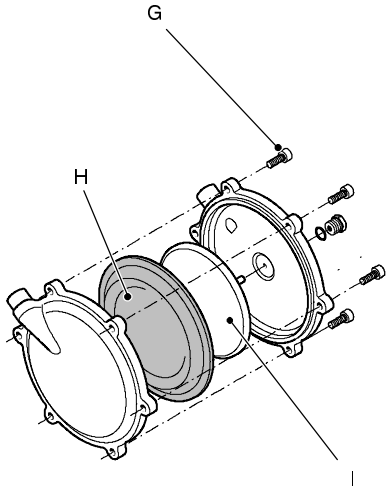

fig. 28

5 Assemble the part proceeding in reverse order.

Assembling the part, ensure to place the concave side of the membrane towards the actuator plate *I* (fig. 28).

When fixing the actuator to the valve, fit the reference shaft *J* in the seat of the valve (fig. 29).

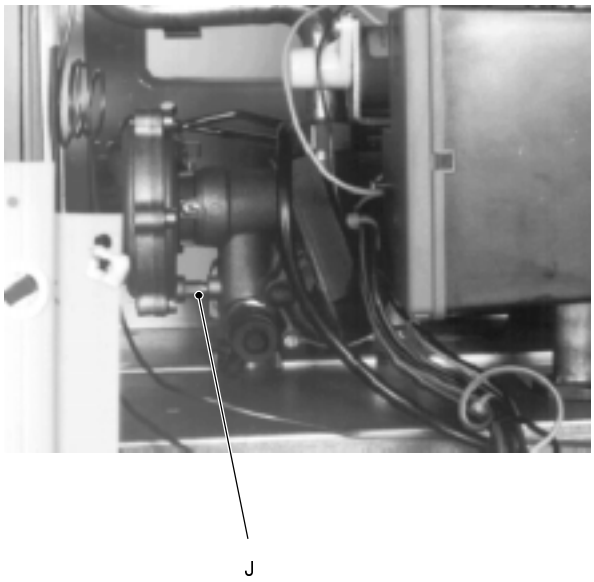

fig. 29

Removal of the switch

1 Switch off the boiler; remove the front panel of the case, the lower protection plate and lower the control panel.

2 Remove the fork *K* that holds the d.h.w. pressure switch *L* placed on the right side of the valve and remove the switch (fig. 30).

3 Open the box and disconnect the switch.

4 Reassemble the switch proceeding in the reverse order.

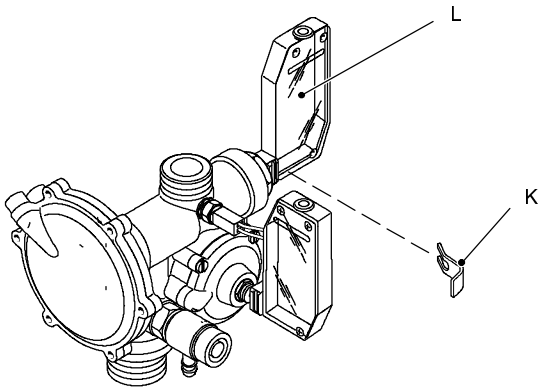

fig. 30

Removal of the valve and the diverter mechanism

1 Switch off the boiler; remove the front panel of the case, the lower protection plate and lower the control panel.

2 Drain the d.h.w. and the c/h circuits.

3 Completely loosen the connections to the hydraulic circuits indicated in fig. 31.

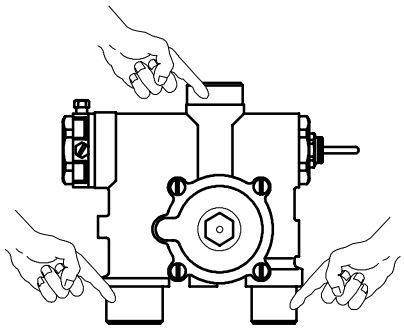

fig. 31

4 Remove the forks *M* and move away the pipes *N* (fig. 32).

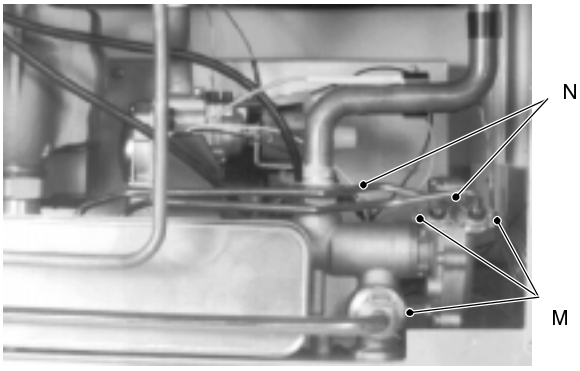

fig. 32

5 Remove the forks that hold the d.h.w. pressure switch *O* and the main circuit flow switch *P* and separate the switches from the valve (fig. 33).

6 Disconnect the temperature probe *Q*.

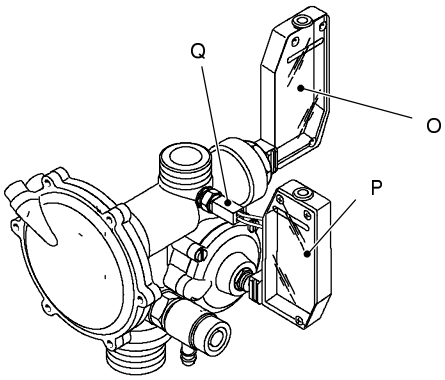

fig. 33

7 Unscrew the screw *R* that holds the d.h.w. heat exchanger, the bolt *S* that holds the valve to the frame (fig. 34) and remove the valve.

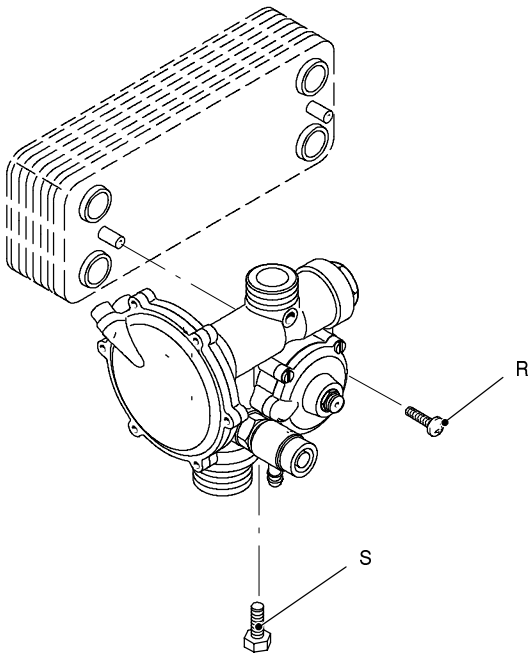

fig. 34

The diverter mechanism is composed by two parts. To reach them remove the hydraulic actuator as explained at the step 3 of the part *Removal of the membrane* of this chapter.

With a suitable spanner unscrew both plugs indicated in fig. 35 and remove the parts of the diverter mechanism.

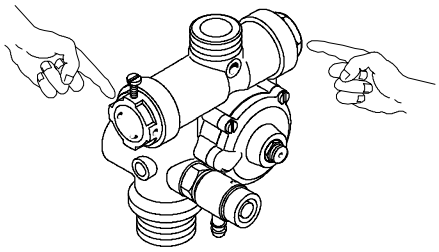

fig. 35

Reassemble the valve proceeding in the reverse order.

9 Electronic control circuit

9.1 Function

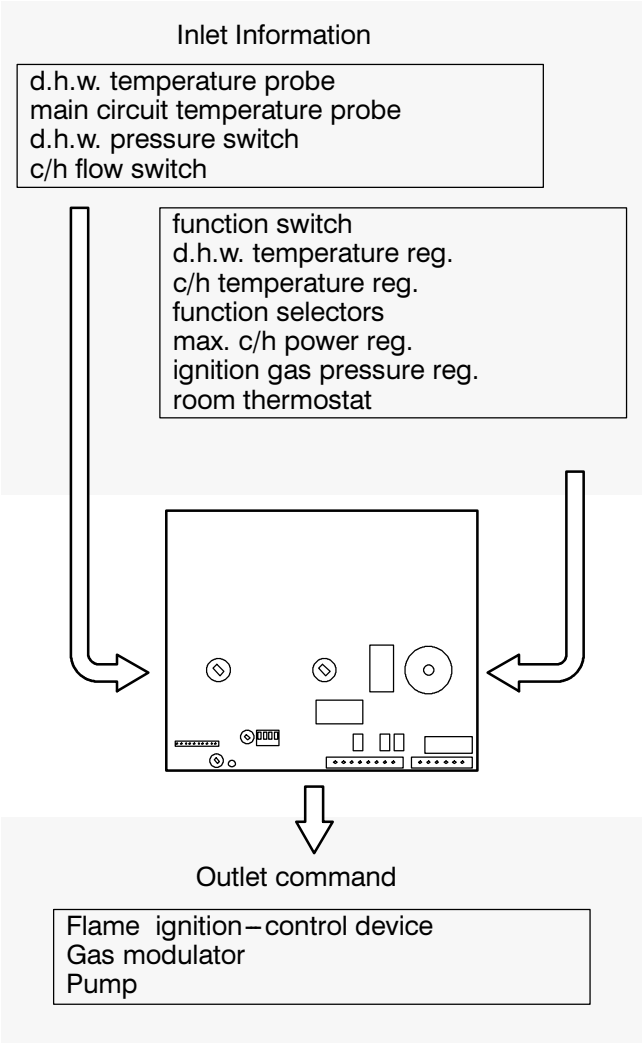

fig. 36

The fundamental function of the control circuit is that of controlling the boiler in relation to the external needs (heating the room, heating the water for d.h.w. use) operating in order to keep the temperature of the hydraulic circuits constant.

This is obviously possible within the useful power and maximum working temperature limits foreseen.

Generally, the control circuit receives inlet information coming from the boiler (the sensors) or from the outside (knobs, room thermostat, etc.), processes them and consequently acts with outlet commands on other components of the boiler (fig. 36).

9.2 Selection and adjustment devices

On the control circuit several selection, adjustment and protection devices are located. (fig. 37).

Several of these devices are directly accessible by the user (function switch, temperature adjustment potentiometers etc.) others are accessible by removing the service panel.

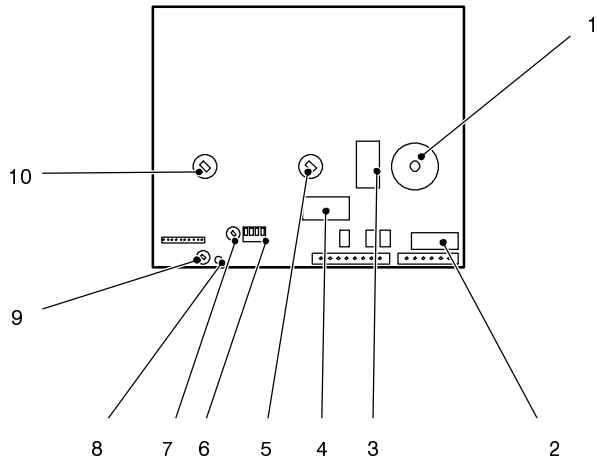

fig. 37

1 function switch
2 fuse F2 (1,6 A)
3 K1 relay
4 K2 relay (ignition device control)
5 d.h.w. temperature reg. potentiometer
6 function selectors
7 ignition gas pressure adjustment (ACC.)
8 green LED (boiler on)
9 c/h maximum power adjustment (RISC.)
10 c/h temperature reg. potentiometer

9.3 Checking the temperature

The control circuit makes it possible to separately adjust the c/h water flow and d.h.w. outlet temperature.

The temperature of the water is converted into an electric signal by means of temperature probes.
The user, setting the desired temperature with the knobs of the instrument panel operates the variable elements (5 and 10 in fig. 37) of the control circuit.

If the power requested is lower by about 40% of the maximum useful output, the control is done by igniting at the minimum power and turning off the burner (on–off function). If the power is higher the boiler will modulate down to 40% of its maximum power output.

When the boiler functions in c/h (fig. 38), the signal coming from the primary temperature probe is compared to the signal given by the instrument panel through the adjustment made by the user (knob). The result of such a comparison operates the modulation of the gas valve, consequently changing the instantaneous useful output of the boiler.

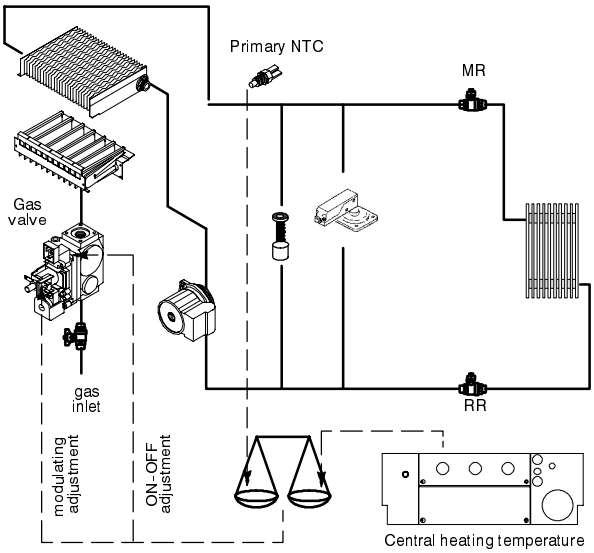

fig. 38

When the boiler functions in d.h.w. (fig. 39), the signal coming from the d.h.w. temperature probe is compared with the signal given by the instrument panel through the adjustment made by the user (knob).

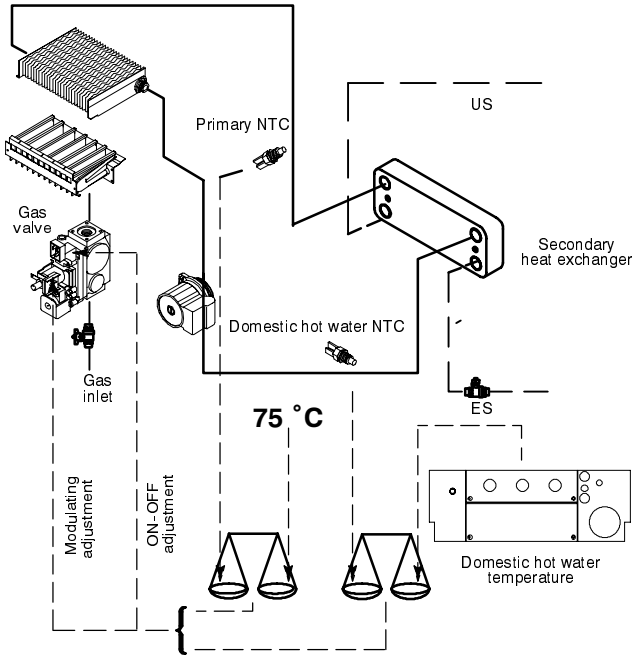

fig. 39

Normally, the result of the comparison between these two signals directly operates the adjustment elements of the gas valve, adjusting the useful output generated in order to stabilize the temperature of the exiting water.

If during the functioning in d.h.w. mode, the temperature of the primary circuit goes over 75°C, the useful output is automatically reduced so that the primary circuit cannot reach excessive temperatures.

The control sequences in ❄ function and in ✺ function are illustrated in detail in sections 9.9 and 9.10.

9.4 Function selectors

The function selectors ”6” (fig. 37 and fig. 40) are microswitches with which it is possible to select the various modes of functioning of the boiler.

In fig. 40 the selectors are illustrated in the configuration in which the p.c.b. is set in the factory (natural gas boiler).

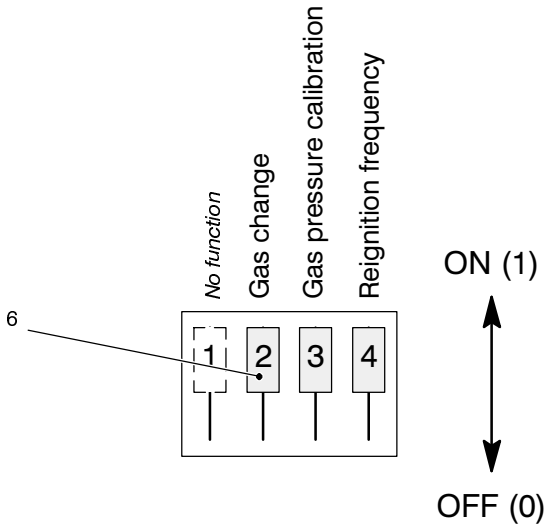

fig. 40

○ Selector 2

It selects the functioning of the boiler on the basis of the type of gas used.

It allows the selection of the maximum supply current given to the modulator device.

To set correctly the selector follow the table of fig. 41.

Gas supply	Position of selector	Approx. Max current trough the modulator device
Natural gas	On	120 mA
L.P.G.	Off	165 mA

fig. 41

○ Selector 3

It forces the functioning of the boiler in order to permit the optimal gas pressure at the burner to be adjusted during the ignition phase.

The adjustment (see section 9.5) is done by means of the potentiometer ”7” marked “ACC” (fig. 37).

After the adjustment operations bring the selector back to the normal position (ON).

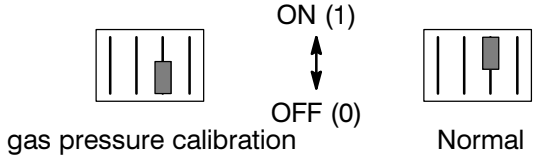

fig. 42

○ Selector 4

It makes it possible to select the minimum time that must pass between two ignitions of the burner in c/h function.

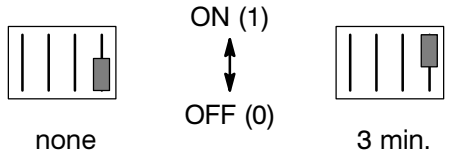

fig. 43

9.5 Ignition gas pressure regulator

By using the device ”7” (fig. 37) marked “ACC.” on the circuit board, it is possible to adjust the gas pressure at the injectors in the ignition phase.

This pressure is maintained at the injectors until ignition occurs (ionization signal).

To carry out the adjustment move the function selector nº 3 downwards (adjustment) and use the adjustment device ”7” (ACC).

Bring the gas pressure at the injectors to the value indicated in the tables ”data for gas adjustment” stated for each model in the second part of the manual (ignition pressure).

By rotating the device clockwise the pressure increases.

Check the regular ignition of the burner by turning the boiler on and off repeatedly.

After the adjustment operation move the selector upwards (normal).

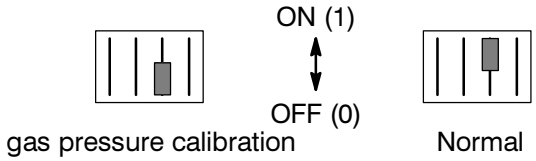

fig. 44

9.6 Max. c/h power regulator

By using device 9 (fig. 37) marked “RISC.” on the circuit board, you can limit the maximum useful output delivered in the c/h function. This adjustment does not influence the maximum useful output delivered in d.h.w. function.

By rotating the device clockwise the pressure increases.

9.7 Checks

Check that the fuse is complete

If the control circuit does not supply any device (pump, gas valve, etc.) check that the fuse F2 is complete (fig. 45).

The F2 fuse can be reached by removing the service panel.

If the fuse is blown replace it with one that has the same characteristics after having identified the cause of the interruption.

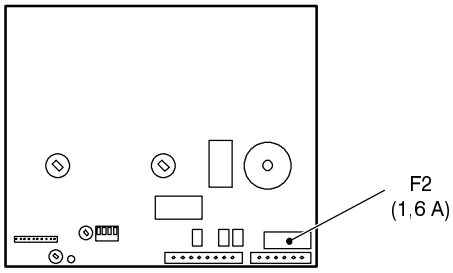

fig. 45

9.8 Removal of the control circuit

Warning: isolate the boiler from the mains electricity supply before removing any covering or component.

1 Remove the boiler’s front panel;

2 unscrew the six screws *A* (fig. 46) and remove both panels;

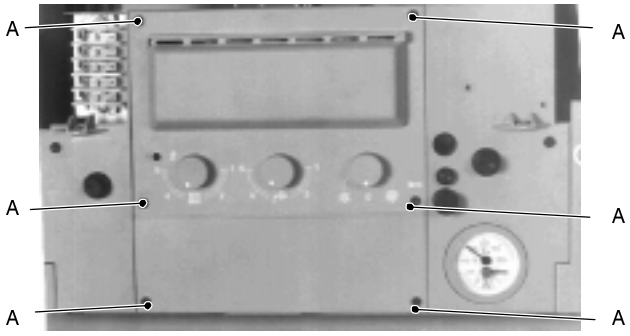

fig. 46

3 Delicately flex the hooks indicated infig. 47 and disconnect the connectors *B*

4 Unscrew the four screws *C* and remove the circuit (fig. 47);

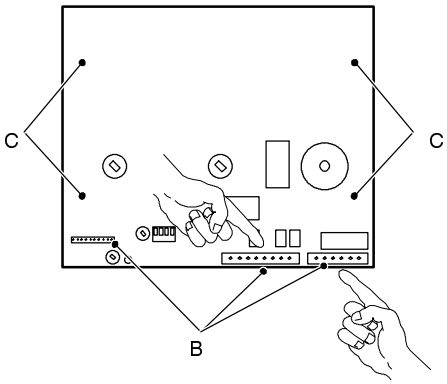

fig. 47

5 assemble the control circuit following the disassembly procedures in the reverse order.

Attention: after having installed the control panel make sure the central heating ( ) and domestic hot water temperature ( ) adjustment knobs can move freely (half a turn).

9.9 Thermal control in the "❄" mode

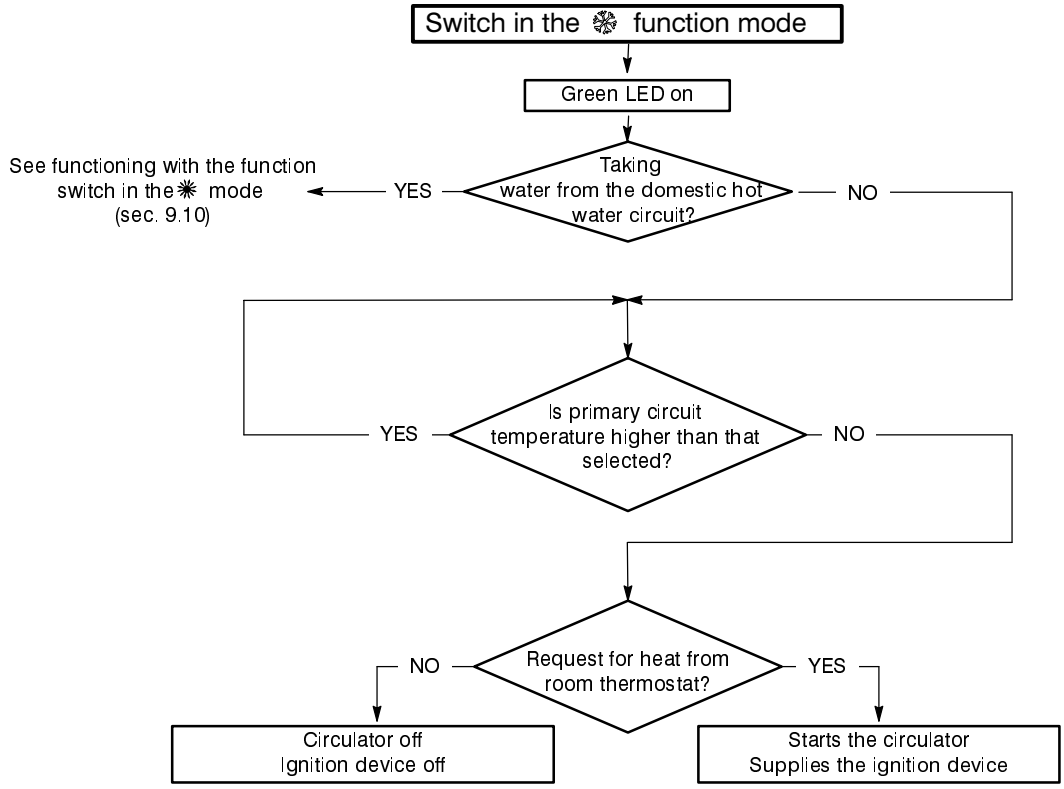

fig. 48

9.10 Thermal control in the "✳" mode

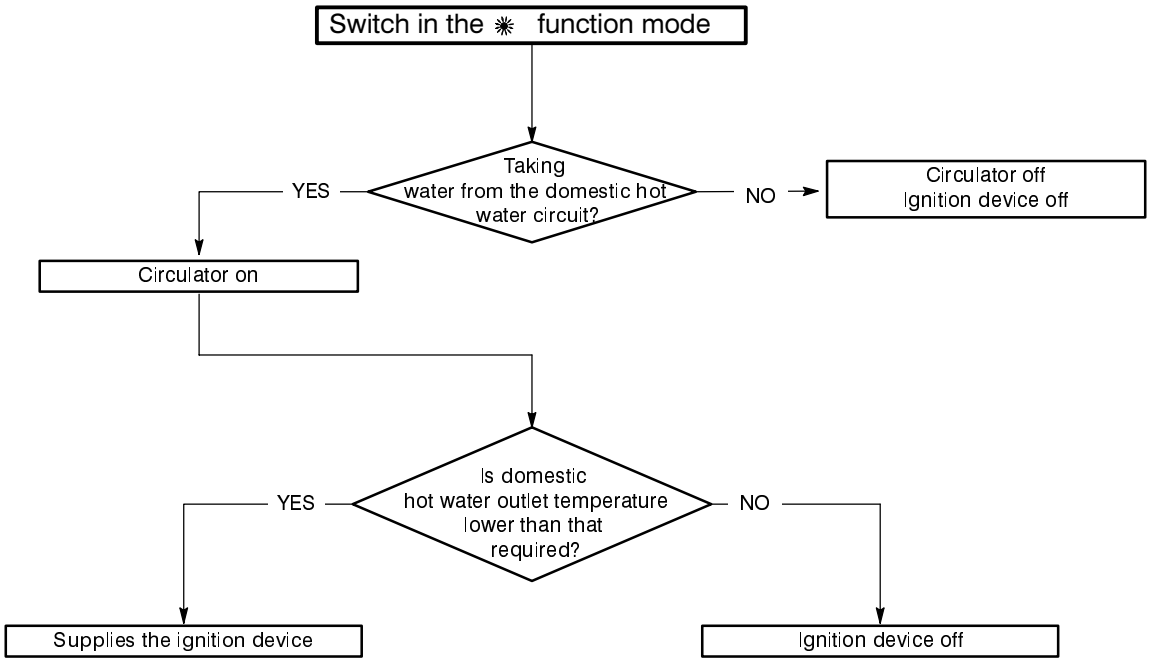

fig. 49

10 Full sequence ignition device

10.1 Function

The ignition and flame control device, type S4565DD, used on electronic ignition boilers with forced flue gas expulsion carries out the following fundamental functions:

- does a sequence of operations (ignition cycle) which lead to the ignition of the gas at the burner
- checks the presence of the flame during the entire period in which it is activated
- supplies the fan and checks its functioning by means of the signal coming from the flue gas pressure switch.

The ignition device is supplied by the electronic control circuit when the ignition of the burner is requested.

The ignition device has a **safety function** and any incorrect interventions or tampering can result in conditions of dangerous functioning of the boiler.

The ignition device can lock the functioning of the boiler (lock state) and stop its functioning up to the resetting intervention. The lock is signalled by the ignition of the lock lamp and the device can be reset only by using the reset push–button placed on the instrument panel.

Some components which are connected to the device that, can activate the lock state. The causes of a lock state could be:

- the intervention of the safety thermostat (primary hydraulic circuit)
- a fault on gas feeding
- faulty ignition (ignition electrode, its wiring and connection)
- faulty flame detection (detection electrode, its wiring and connection)
- gas injectors plugged
- faulty gas valve (on–off operators) or not electrically supplied
- faulty ignition device

other components like the flue gas pressure switch can temporarily stop the ignition of the burner but allow its ignition when the cause of the intervention has stopped.

fig. 52 shows the sequence of the operations that are carried out at the starting of every ignition cycle and during normal functioning.

10.2 Checks

Shutdown sequence

Start the boiler until the burner is ignited.

While the burner is on, turn the gas supply off. The device should carry out a complete ignition cycle and then shutdown.

When turning the boiler on and off with the function switch, the device should not reset itself and the burner should not turn on.

10.3 Removal

Warning: isolate the boiler from the mains electricity supply before removing any covering or component.

1 Remove the front panel of the case and lower the control panel;

2 Unscrew screw *A* and remove the protection cover *B* ; disconnect the flame detection cable *C* and the ignition cable *D* (fig. 50);

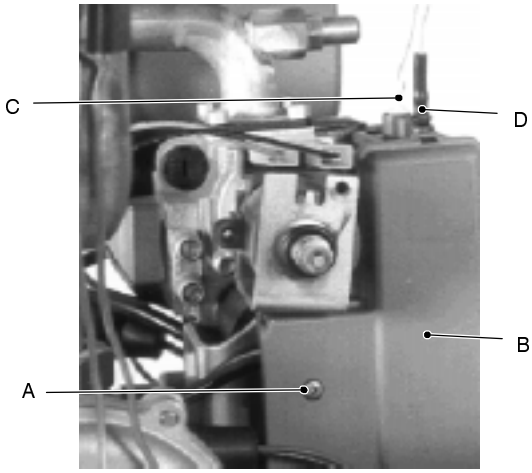

fig. 50

3 remove the cable clamp and disconnect the two wires;

4 remove the ignition device by moving it from towards left (fig. 51);

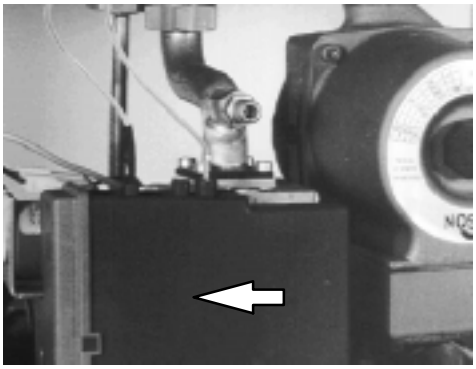

fig. 51

10.4 Ignition sequence

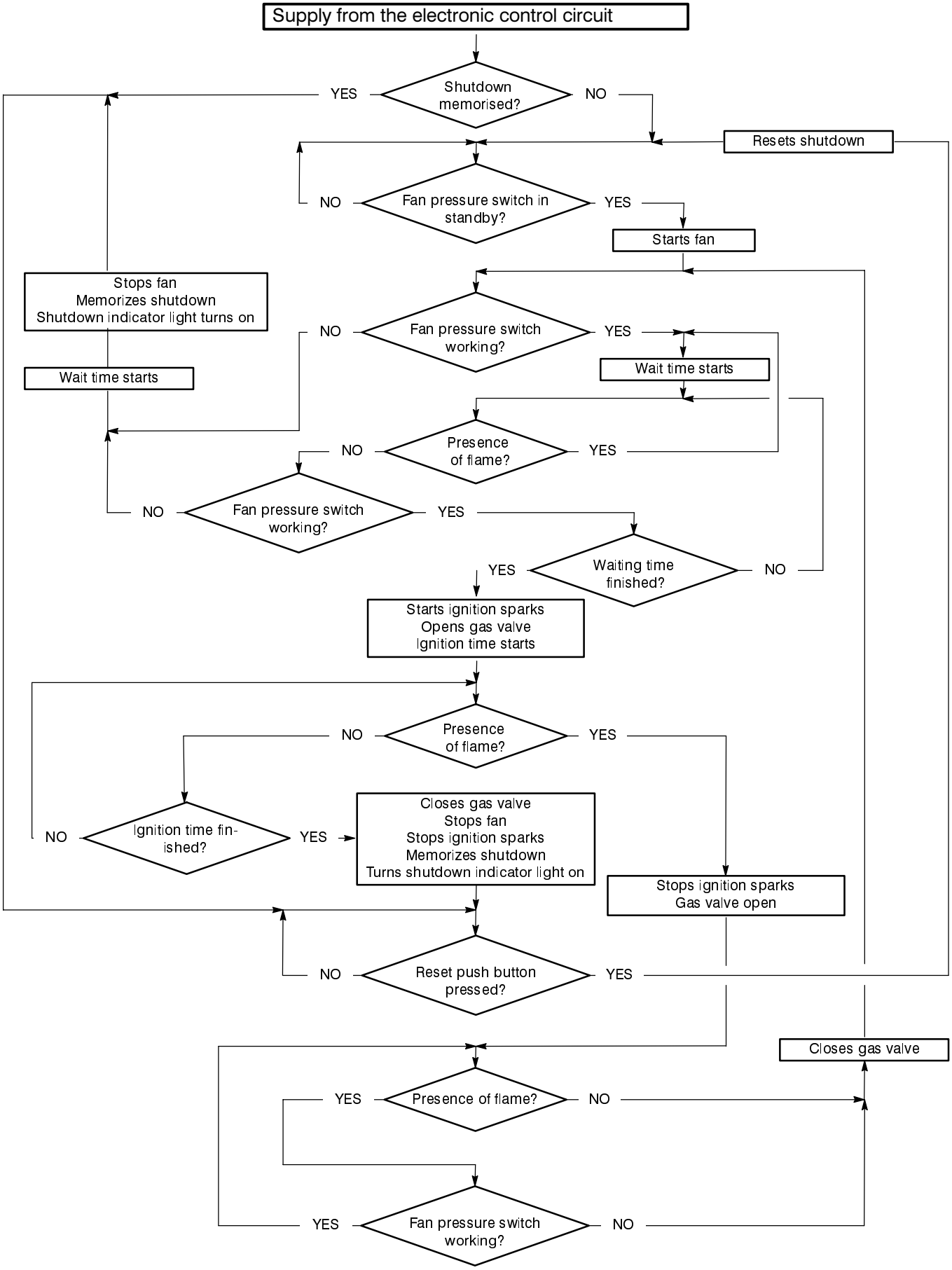

fig. 52

11 Gas valve

11.1 Function

The gas valve controls the gas inflow to the boiler burner.

By means of an electric command given to the on–off operators the passage of the gas through the valve can be opened or closed.

By means of an electric command given to the modulating operator the pressure can be varied and therefore the gas flow rate to the burner (modulation). The modulator device has mechanical organs which permit the adjustment of the minimum and maximum pressure exiting the valve.

11.2 Nomenclature of the parts

1 On–off operators

2 Modulating operator

3 Modulating operator's electric connectors

4 Valve inlet gas pressure test point

5 Valve outlet gas pressure test point

6 Gas pressure maximum adjuster

7 Gas pressure minimum adjuster

11.3 Adjustment

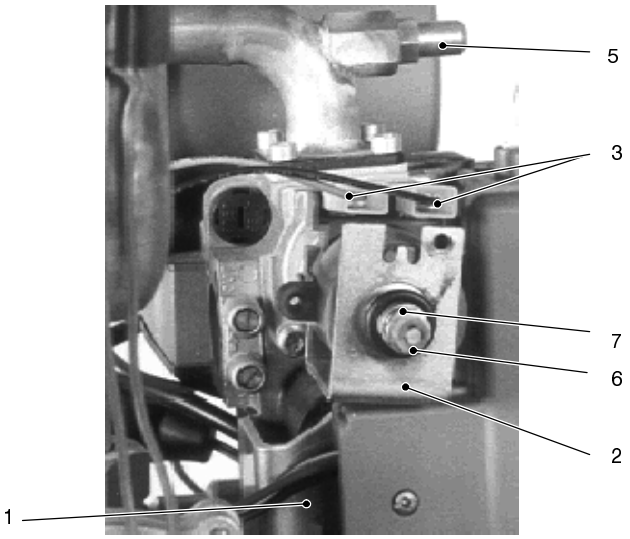

fig. 53

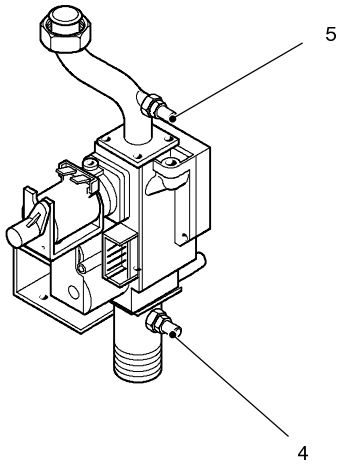

fig. 54

Warning: isolate the boiler from the mains electricity supply before removing any covering or component.

1 Open the gas pressure tap "4" at the valve input, connect a gauge and check the gas pressure of the supply network;

2 close the gas pressure tap "4";

3 open the gas pressure tap "5"at the valve output and connect a pressure gauge;

4 remove the protection cap from the mechanical pressure adjustment elements;

5 disconnect one of the two connectors "3" of the modulating operator;

6 start the boiler;

7 rotate the minimum pressure adjuster "7" until you obtain the espected pressure (by rotating clockwise the pressure increases);

8 turn the boiler off and connect the wire to the modulating operator;

9 start the boiler;

10 rotate the maximum pressure adjuster "6" until you obtain the espected pressure (by rotating clockwise the pressure increases);

11 turn the boiler off and disconnect the gauge;

At the end of the adjustment ensure to seal the gas test point.

11.4 Checks

Warning: isolate the boiler from the mains electricity supply before removing any covering or component.

Check the modulating operator coil

1 Remove the front panel of the case and lower the control panel.

2 Disconnect one of the two connectors "3" of the modulating operator and measure the electrical resistance of the coil.
Its electrical resistance value must be approx. 125 Ω.

Check the modulating operator coil

1 Remove the front panel of the case and lower the control panel.

2 Remove the full sequence ignition device (see the related chapter of this manual).

3 Measure the electrical resistance between the leads of the on–off operators as illustrated in fig. 55.

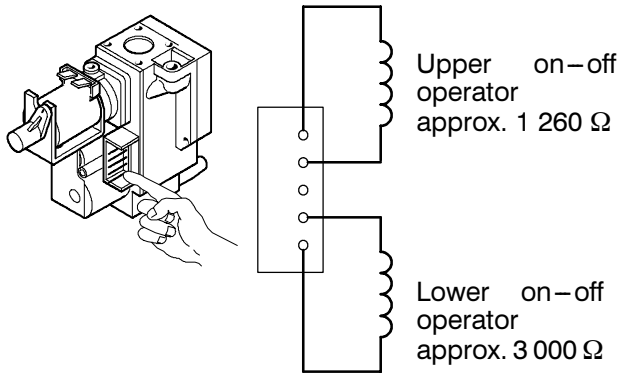

fig. 55

11.5 Removal

Warning: isolate the boiler from the mains electricity supply before removing any covering or component.

1 Remove the front panel of the case and lower the control panel.

2 Remove the full sequence ignition device (see the related chapter of this manual).

3 Disconnect the modulating operator.

4 Unscrew the eight screws indicated in fig. 56 and remove the valve.

5 Reassemble the valve carrying out the removal operations in reverse order.

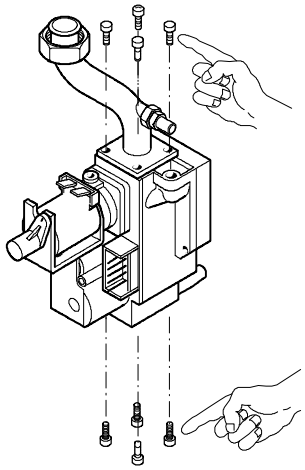

fig. 56

12 Main circuit flow switch

12.1 Function

The main circuit flow switch (*A* in fig. 57) is a device that controls the speed of water that crosses the main heat exchanger.

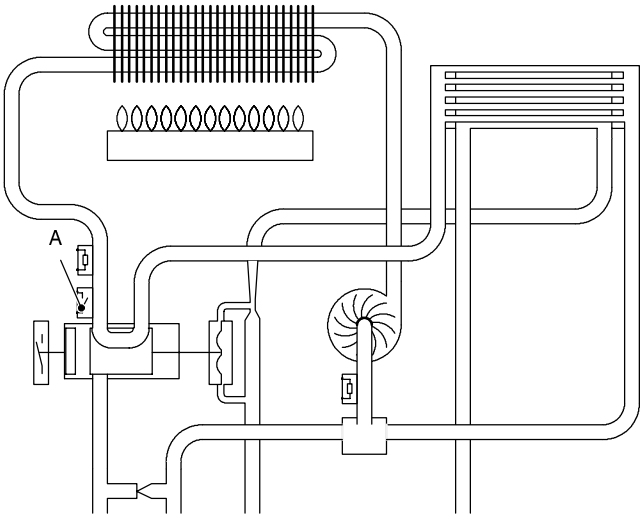

fig. 57

This device controls the regular functioning of the pump, the presence of water in the primary circuit of the boiler and the absence of obstructions of the main heat exchanger during the c/h function as well as during the d.h.w. function.

As a consequence of any one of these causes the main circuit flow switch cuts–off an electric circuit by means of a microswitch (*B* in fig. 59) installed on it.

The main circuit flow switch is connected to the electronic control circuit and its intervention prevents or stops the burner ignition cycle but does not send the boiler in the lock state.

12.2 Checks

Warning: isolate the boiler from the mains electricity supply before removing any covering or component.

General check

It is possible to verify the general operation of the switch by measuring the voltage between its leads during the operation on c/h or d.h.w.

Warning: isolate the boiler from the mains electricity supply before removing any covering or component.

1 Switch off the boiler and open the service panel.

2 Connect a meter, set for alternating voltage (230V) measurement, to the points indicated in fig. 58.

3 Switch the boiler on ❄ position and verify the voltage by matching the readings with the values indicated in the section 3.3.

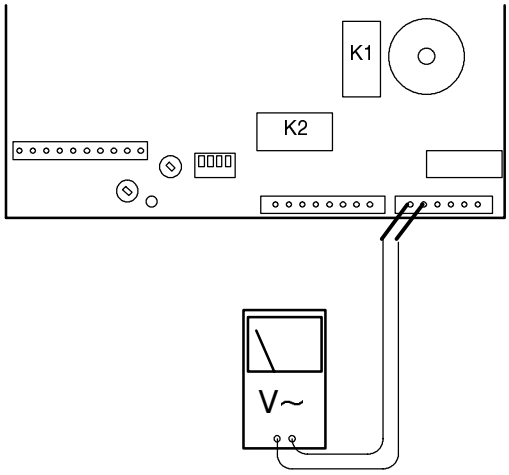

fig. 58

Mechanical function

1 Remove the front panel of the case and lower the control panel.

2 Remove the fork *C* that holds the main circuit flow switch *B* (fig. 59).

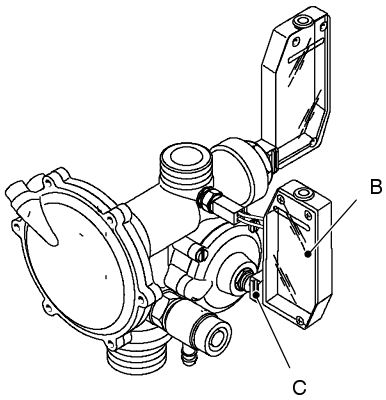

fig. 59

3 Start and stop the boiler in c/h operation (time switch and external controls must call for heat) and verify the position of the shaft*D* referring to fig. 60

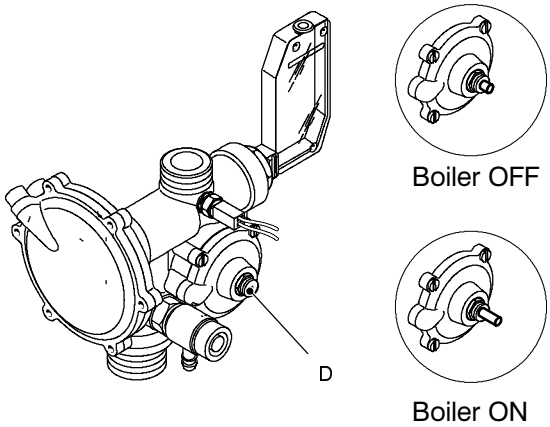

fig. 60

12.3 Removal

Warning: isolate the boiler from the mains electricity supply before removing any covering or component.

Removal of the membrane

1 Remove the front panel of the case, lower the control panel and empty the main circuit.

2 Remove the fork *E* that holds the main circuit flow switch *B* (fig. 59).

3 Unscrew the four screws *F*, open the hydraulic operator and remove the membrane *G* (fig. 61).

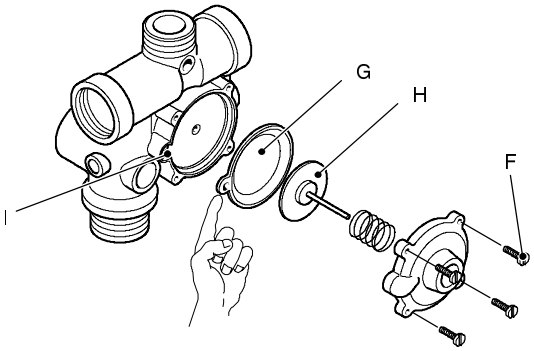

fig. 61

4 Assemble the part proceeding in reverse order.

Assembling the part, ensure to place the concave side of the membrane towards the actuator plate *H* and the reference hole indicated in the seat *I* (fig. 61).

Removal of the switch

1 Switch off the boiler; remove the front panel of the case, the lower protection plate and lower the control panel.

2 Remove the fork *C* that holds the switch placed on the valve and remove the switch (fig. 59).

3 Open the box and disconnect the switch.

4 Reassemble the switch proceeding in the reverse order.

13 D.h.w. filter and flow limiter

13.1 General notes

The input port of the d.h.w. circuit is provided wit a net filter and its function is to stop the passage of any impurities through the circuit.

The d.h.w. filter is located in the c.h. return group (indicated in fig. 62).

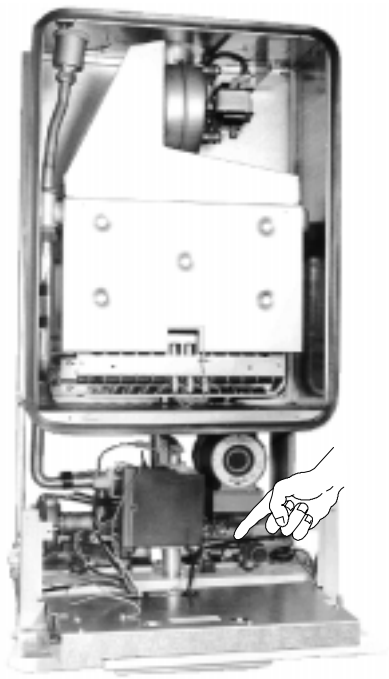

fig. 62

13.2 Removal of the filter

Warning: isolate the boiler from the mains electricity supply before removing any covering or component.

1 Remove the front panel of the case, the lower protection plate, lower the control panel and empty the d.h.w. circuit.

2 Unscrew the plug *A* (fig. 63) and extract the filter.

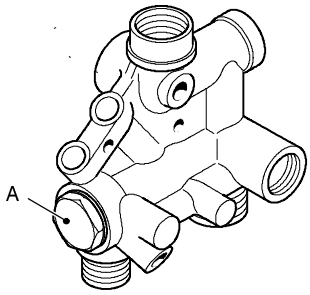

fig. 63

13.3 Flow limiter

If the flow rate of the d.h.w. circuit is too high, it is possible to limit it installing a flow limiter. The following sizes are available:

Nominal flow rate (litres/min)	Colour
10	Blue
12	Red

To install the flow limiter operate as in the following sequence:

1 Remove the d.h.w. filter as explained in the section 13.2.

2 Unscrew the part *B* (fig. 64) and remove it from the body of the filter.

3 Install the flow limiter *C* putting its smaller diameter side towards the part *B*.

4 Install the filter following the removing sequence in reverse order.

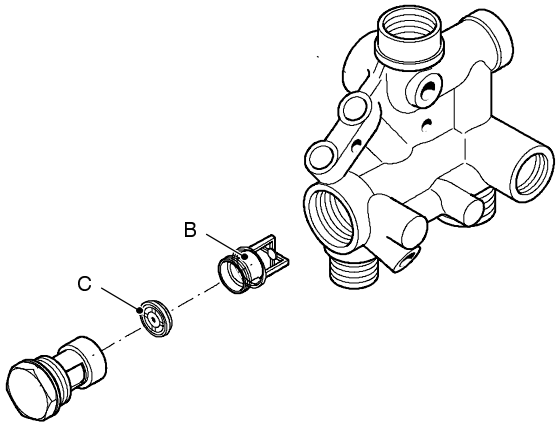

fig. 64

14 Temperature probes

14.1 Function

The temperature probe has the function of converting the temperature of the water of the hydraulic circuit where it is installed into an electric signal (resistance).

The relation between temperature and electrical resistance is stated in fig. 65.

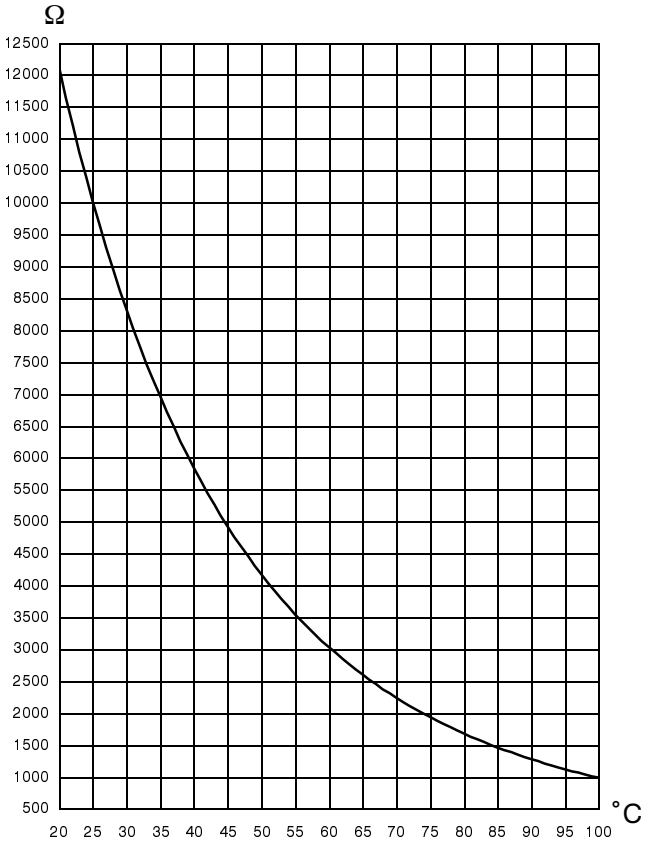

fig. 65

In the boilers with mixed function (c/h + d.h.w.) two temperature probes are assembled, one on the output of the main heat exchanger (main circuit temperature probe) *A*, (fig. 66 and fig. 67)one on its input, before the pump (d.h.w. temperature probe) *B* (fig. 66 and fig. 68).

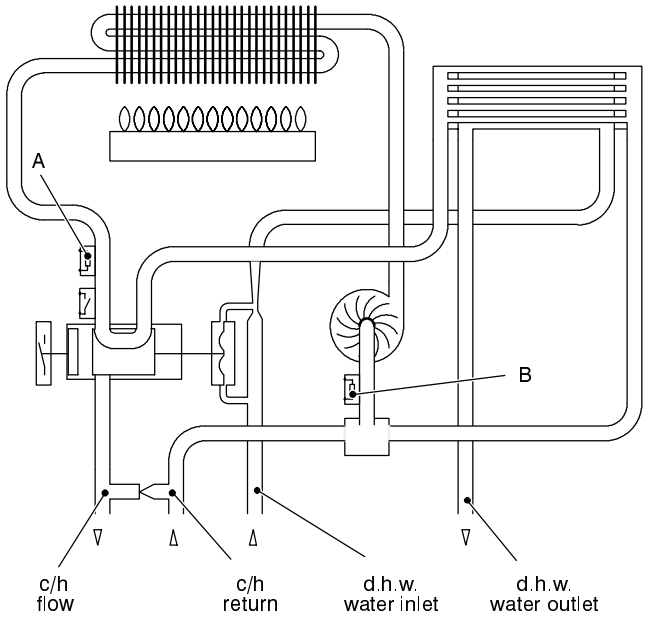

fig. 66

14.2 Checks

Temperature – resistance relationship

Warning: isolate the boiler from the mains electricity supply before removing any covering or component.

Disconnect the cable from the temperature probe.

Measure the temperature of the pipe near the temperature probe and check the electrical resistance according to the graph in fig. 65.

Remember that a temperature probe failed in short circuit sends a signal to the control circuit at a temperature equivalent to 100°C. A disconnected or interrupted temperature probe sends a signal at a temperature equivalent 0°C thus the burner will always be on maximum power.

14.3 Removal

Warning: isolate the boiler from the mains electricity supply before removing any covering or component.

To remove the main circuit or the d.h.w. temperature probes follow the same sequence.

Refer to fig. 67 for the main circuit temperature probe, to fig. 68 for the d.h.w. temperature probe.

1 remove the front panel of the case and lower the instrument panel
2 empty the main circuit of the boiler.
3 remove the electric connector of the temperature probe and unscrew it.
4 assemble the temperature probe carrying out the removal operations in reverse order.

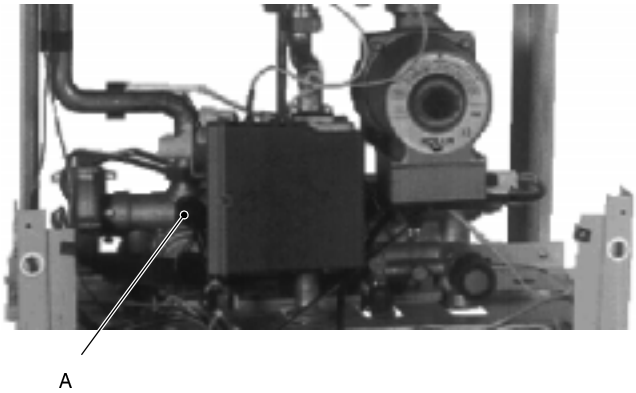

fig. 67

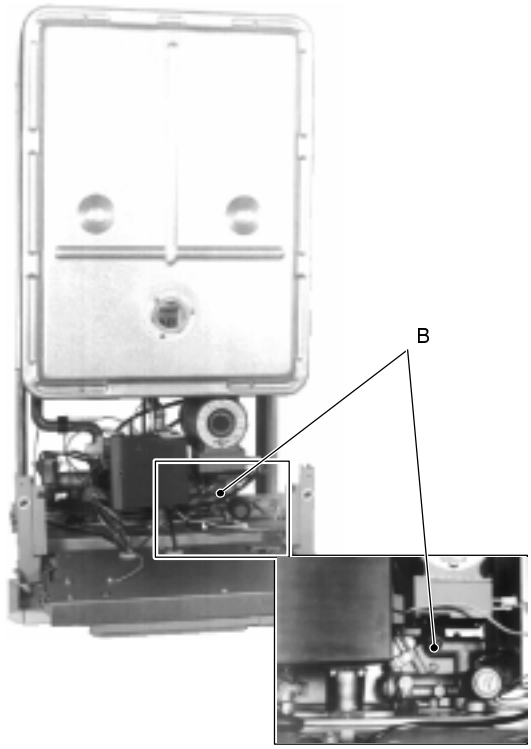

fig. 68

15 By–pass valve

15.1 Function

The by–pass valve is located between the c/h water flow and return (*A* in fig. 69) and its function is that of guaranteeing a minimum flow across the main heat exchanger also if the circulation across the c/h system is completely closed.

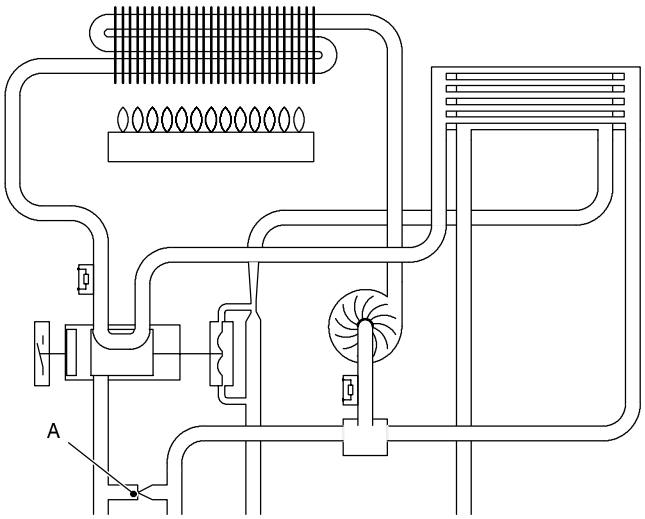

fig. 69

15.2 Removal

Warning: isolate the boiler from the mains electricity supply before removing any covering or component.

1 remove the front panel of the case and lower the instrument panel

2 empty the main circuit and the d.h.w. circuits of the boiler.

3 Remove the hydraulic actuator *B* (fig. 70) as explained in the section *Diverter valve and d.h.w. pressure switch* of this manual.

4 Remove the fork *C* and the pipe *D*.

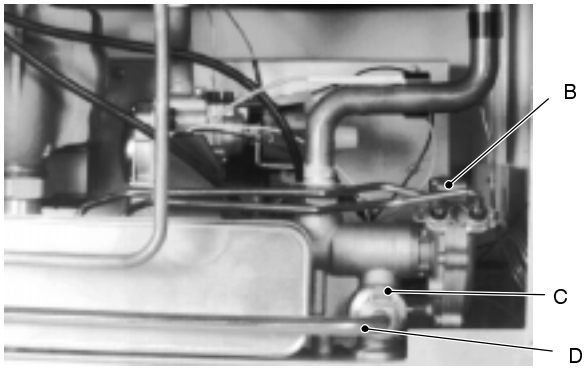

fig. 70 (rear view of the boiler)

5 Unscrew the connector *E* and remove the by–pass valve *F* (fig. 71).

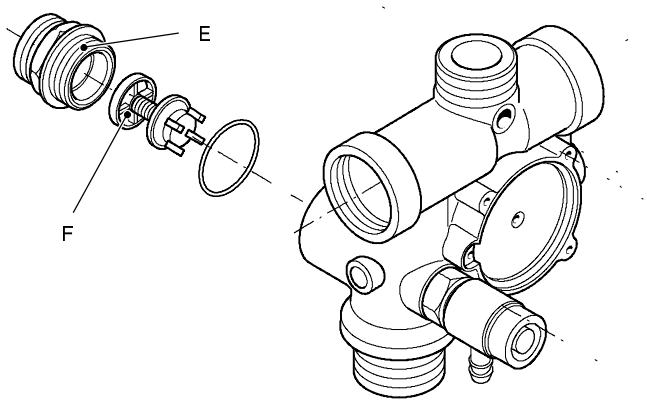

fig. 71

6 Reassemble the by–pass valve as illustrated in fig. 71 and proceeding in reverse order.

16 Flue fan, venturi, air pressure switch

16.1 Function

The boiler has a fan whose function is that of forcing the expulsion of the products of combustion.

The fan is supplied by the full sequence ignition device at the beginning of the ignition cycle.

Its correct functioning is controlled by means of a system of a built in venturi device and an air pressure switch.

16.2 Checks

Check of the fan

Warning: isolate the boiler from the mains electricity supply before removing any covering or component.

Remove the front panel of the body and the lid of the sealed chamber.

Disconnect the connectors *A* (fig. 72) and measure the electrical resistance of the motor that has to be about 47 Ω.

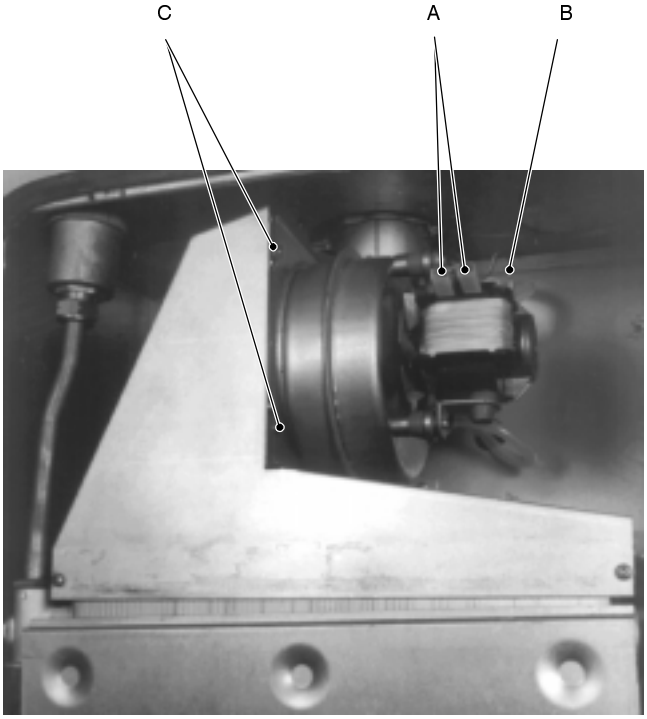

fig. 72

Check of the air pressure switch operation

Warning: isolate the boiler from the mains electricity supply before removing any covering or component.

1 Remove the front panel of the body and the lid of the sealed chamber

2 Disconnect the wires and check the electrical resistance between its connections

Between COM and NO the contact must be open.

Between COM and NC the contact must be closed (electrical resistance zero).

Refer to the fig. 73a b or c in accordance with the type of air pressure switch used.

These switches are interchangeable.

3 Connect the black wire (COM) and the brown wire (NC).

4 Run the boiler (the fan must run) and check the the electric resistance between COM and NO

Between COM and NO the contact must be closed (electrical resistance zero)

Remember that in this condition the boiler runs only for the ignition safety time and than it goes on safety lock – out. The above described test has to be carried out during this period.

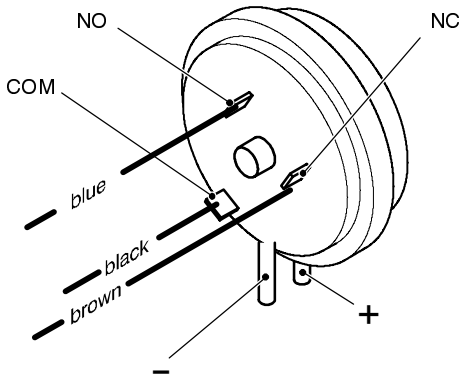

fig. 73a

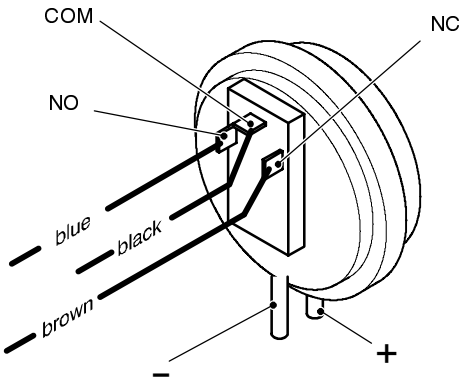

fig. 73b

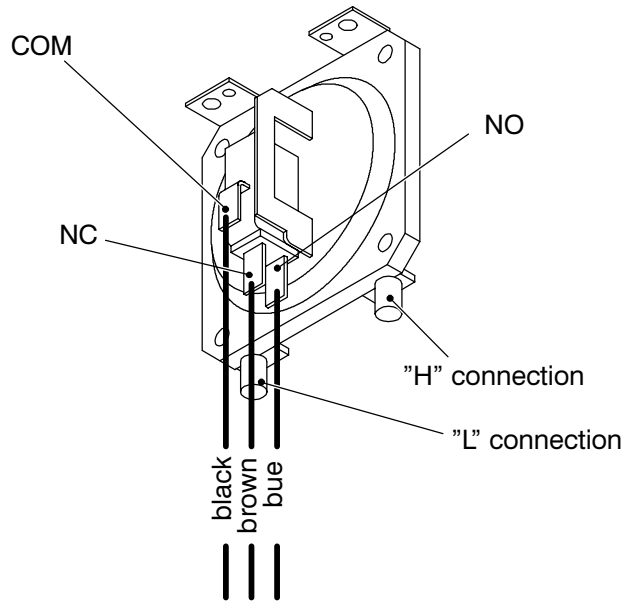

fig. 73c

16.3 Removal of the fan

Warning: isolate the boiler from the mains electricity supply before removing any covering or component.

1 Remove the front panel of the body and the lid of the sealed chamber;

2 disconnect the connectors *A* and the earth connection *B* (fig. 72);

3 disconnect pipes which connect the venturi device to the air pressure switch;

4 unscrew the screws *C* and extract it from the exhaust flue duct than move it towards the front of the boiler;

5 remove the fan;

6 assemble the fan carrying out the removal operations in reverse sequence.

Warning: reassembling the fan, refer to fig. 74 to connect correctly the venturi device to the air pressure switch.

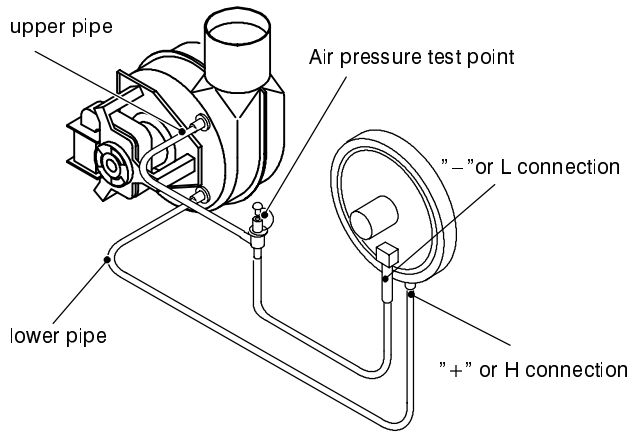

fig. 74

16.4 Removal of the air pressure switch

Note that there are two different air pressure switches with different operating values for the 24S–SR and 28S boilers.

Refer to the short spare parts list for the correct selection of the switch.

Warning: isolate the boiler from the mains electricity supply before removing any covering or component.

1 Remove the front panel of the body and the lid of the sealed chamber;

2 Disconnect the wires of the air pressure switch;

3 Remove the two pipes from the air pressure switch;

4 Unscrew the screw *D* (two for the pressure switch of fig. 73c) which holds the air pressure switch to the frame (fig. 75);

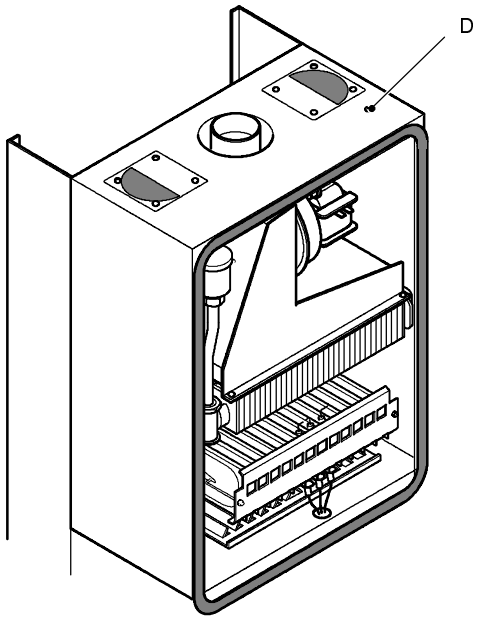

fig. 75

Warning: reassembling the air pressure switch, refer to fig. 73a b or c to connect correctly the wirings and to fig. 74 to connect the venturi device to the air pressure switch.

17 Ignition and detection electrodes

17.1 Function

Three electrodes are fitted on the burner. Two of them are the ignition electrodes and are fitted near the front part of the burner. The ignition sparks take place between their metallic edges over the central ramp of the burner during the ignition sequence.

The third electrode is the detection electrode and it detects the presence of the flame.

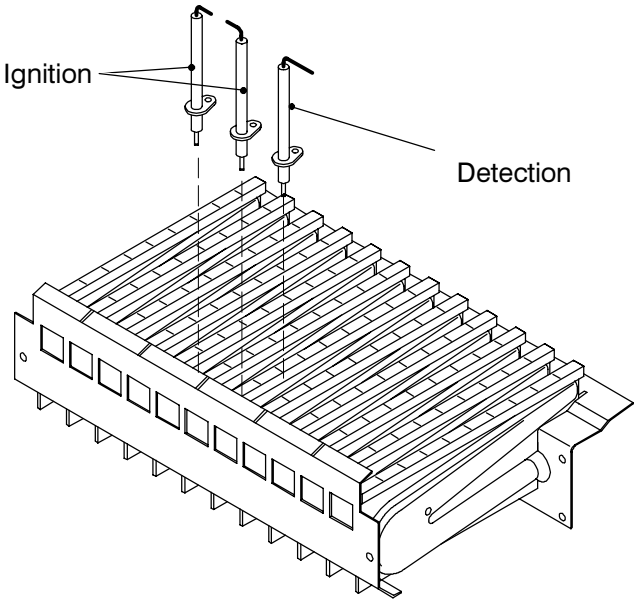

fig. 76

17.2 Checks

Check the position of the electrode edges

Warning: isolate the boiler from the mains electricity supply before removing any covering or component.

Remove the front panel of the body, the sealed chamber cover and the combustion chamber panel.

Check for the correct distance between the metallic edges of the ignition electrodes and refer it to the fig. 77.

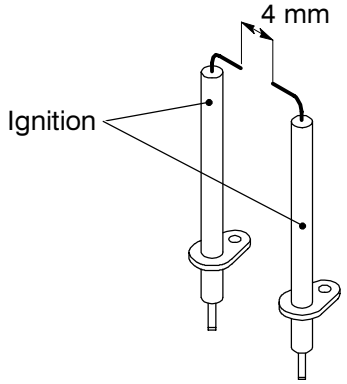

fig. 77

Check the integrity of the detection electrode and ensure that its metallic edge is correctly placed over the ramp of the burner.

Check the connection wires

Warning: isolate the boiler from the mains electricity supply before removing any covering or component.

Remove the front panel of the body, the lid of the sealed chamber and the cover of the combustion chamber.

Check for the integrity of the insulation of wires which connect the electrodes to the ignition device.

17.3 Removal

1 Remove the front panel of the body, the sealed chamber lid and the combustion chamber panel.

2 Remove the burner unscrewing the four screws placed at the right and left sides of the burner.

3 Remove the grid unscrewing the two screws placed on the rear side of the burner.

4 Unscrew the screws *A* (fig. 78) which hold the electrodes to the burner.

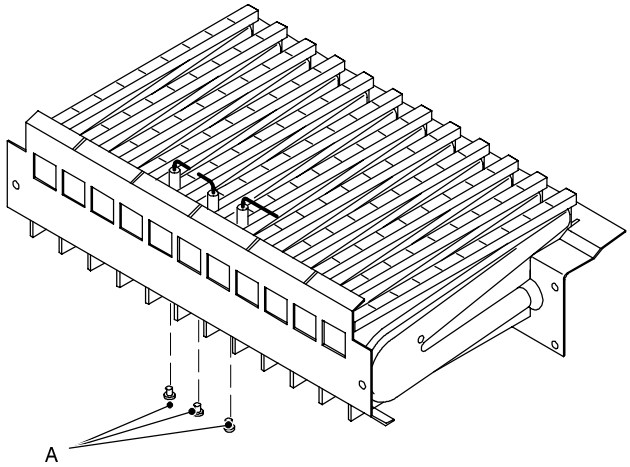

fig. 78

5 Extract the electrodes from the burner.

6 disconnect the electrode wires from the full sequence ignition device.

7 Assemble the electrodes carrying out the removal operation in reverse order.
In order to recognize the electrodes refer to fig. 76.

Note: the metallic edge of the detection electrode is longer than the one of the ignition electrodes.

18 Safety thermostat

18.1 Function

The safety thermostat (*A* in fig. 79) is a device that senses the temperature of the main circuit water which flows in the outlet pipe of the main heat exchanger.

If the temperature control system of the boiler fails and the temperature of the main circuit reaches a dangerous temperature, the safety thermostat opens the electric circuit which supply the full sequence ignition device.

Consequently, the gas valve operators are no more activated and the gas flow to the burner is stopped.

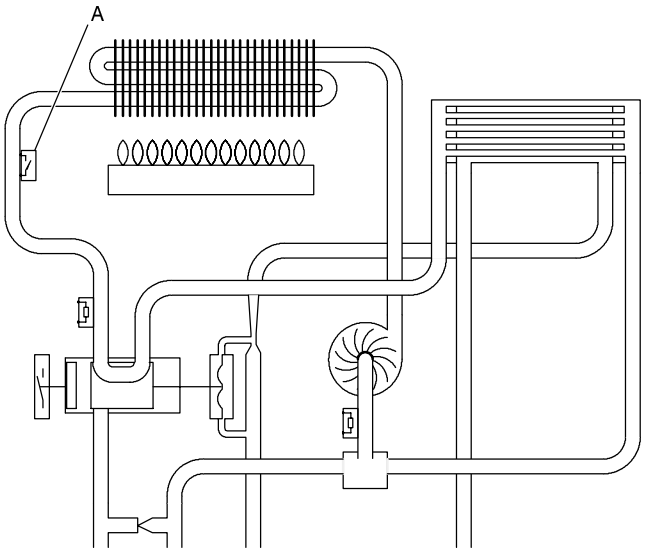

fig. 79

The safety thermostat does not re–set automatically. To reset, it is necessary to push the button *B* with the help of a tool on the instrument panel (fig. 80).

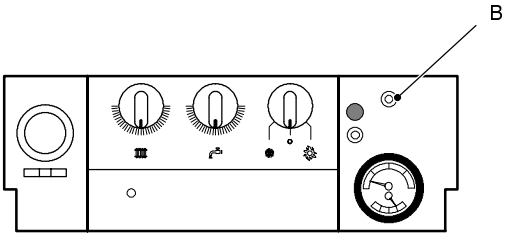

fig. 80

The safety thermostat has two parts:

- the temperature probe *C* which is fitted on the outlet pipe of the main heat exchanger (fig. 81) and the electric switch *D* which is fitted in the instrument panel (fig. 82)

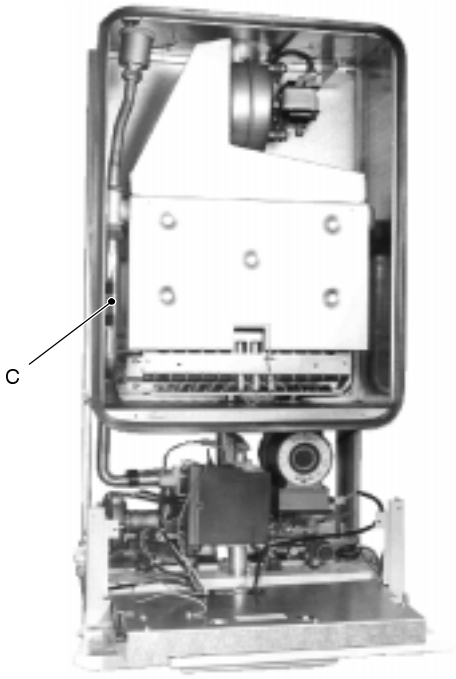

fig. 81

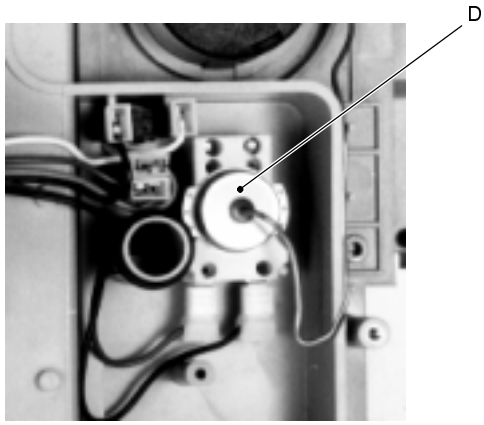

fig. 82

18.2 Checks

Warning: isolate the boiler from the mains electricity supply before removing any covering or component.

Position of probe and integrity

Remove the front panel of the case and the sealed chamber cover.

Verify the soundness of the fitting between the main circuit pipe and the temperature probe *C* (fig. 81).

Verify the integrity of the capillary which connects the probe to the switch. If the capillary is broken the switch opens automatically.

Overheat temperature value

Set the temperature control knobs to their max. position and run the boiler in d.h.w. and c/h. Allow the boiler to reach its maximum operating temperature (monitor the

temperature gauge on the instrument panel). The boiler should operate and maintain a temperature below that of the safety thermostat and no overheat intervention should occur.

It is not permissible to change the factory setting of the safety thermostat. The safety thermostat must be replaced if its operation temperature is too low and therefore constantly interrupts the correct functioning of the boiler and not allowing it to reach its maximum permissible operating temperatures.

✓ Electrical function

Remove the rear lid of the instrument panel (see chapter *access to and emptying hydraulic circuits*).

Disconnect the switch and check its electrical function. Normally (no intervention) the contact must be closed (electrical resistance zero Ω).

18.3 Removal

1 Remove the front panel of the body and the sealed chamber cover.

2 Remove the springs which hold the temperature probe and extract the probe from the sealed chamber

3 Remove the rear lid of the instrument panel (see chapter *access to and emptying hydraulic circuits*) section 2.4;

4 Disconnect the switch

5 From the front side of the instrument panel remove the protective cap, unscrew the nut which holds the switch and remove it.

6 Reassemble the switch carrying out the operations in reverse order.

19 Short spare parts list

Key	G.C. part no.	Description	Q.ty	Manufac-turer part no.	Manufacturer's reference
1	E01 167	13 ramps burner (mod. 24)	1	BG1003 101	Polidoro
	E01 224	15 ramps burner (mod. 28)	1	BG1013 105	
2	E01 155	Injectors for natural	15	BG1013 502	
	E01 156	Injectors for LPG	15	BG1013 501	
3	E01 161	Gas valve	1	BG1013 108	Honeywell VK4105 M 2014
4	E00 690	Expansion vessel	1	BG1012 110	Zilmet 305008
5	E00 691	Main heat exchanger (mod. 24)	1	BG1002 102	
	E01 218	Main heat exchanger (mod. 28)	1	BG1002 103	
6	E01 199	Fan (mod. 24)	1	BG1016 108	LN Natalini A30 CO009
	E01 240	Fan (mod. 28)	1	BG1016 109	LN Natalini B25 CO009
7	E01 185	Air pressure switch (mod. 24)	1	BG1016 106	LN Natalini Type M 1,4 mbar Honeywell C6065 1,4 mbar*
	E01 232	Air pressure switch (mod. 28)	1	BG1016 105	LN Natalini Type M 1,6 mbar Honeywell C6065 1,6 mbar*
8	379 085	Safety valve	1	BG1001 112	Caleffi 512 ½"
9	E01 189	Combustion chamber panels (mod. 24)	1	BG1006 503	
	E01 234	Combustion chamber panels (mod. 28)	1	BG1006 502	
10	E01 175	Electronic regulation p.c.b.	1	BG1015 108	
11	E01 172	Full sequence control device	1	BG1015 501	Honeywell S4565DD
12	E01 204	D.h.w. heat exchanger (mod. 24)	1	BG1001 101	
	E01 205	D.h.w. heat exchanger (mod. 28)	1	BG1001 102	
13	114 988	Pump	1	BG1002 101	Myson CP53 Salmson MYE 30–15 C–H*
	E00 699	Pump (high head)	1	BG1901 104	Myson CP63 Salmson MYL 50–15 CH3–K*
14	E00 684	Flow switch (main or d.h.w. circuit)	1	BG1011 105	
15	E01 217	D.h.w. flow switch membrane	1	BG1011 102	
16	E00 688	Main. flow switch membrane	1	BG1011 103	
17	379 086	Overheat thermostat	1	BG1015 111	Firt STB/901
18	169 083	Fuse 1,6 A T	1	BG1005 105	
19	164 026	Temperature probe (main or d.h.w. circuit)	1	BG1001 117	
20	E01 042	Automatic air release valve	1	BG1002 111	Caleffi 502040 Minical
21	E01 164	Ignition electrode (left)	1	BG1013 104	
22	E01 165	Ignition electrode (right)	1	BG1013 103	
23	E01 166	Detection electrode	1	BG1013 102	
24	379 087	Reset button	1	BG1015 107	
25	379 088	Shut down warning light	1	BG1015 109	
26	169 096	Temperature–pressure gauge	1	BG1005 501	

* alternative

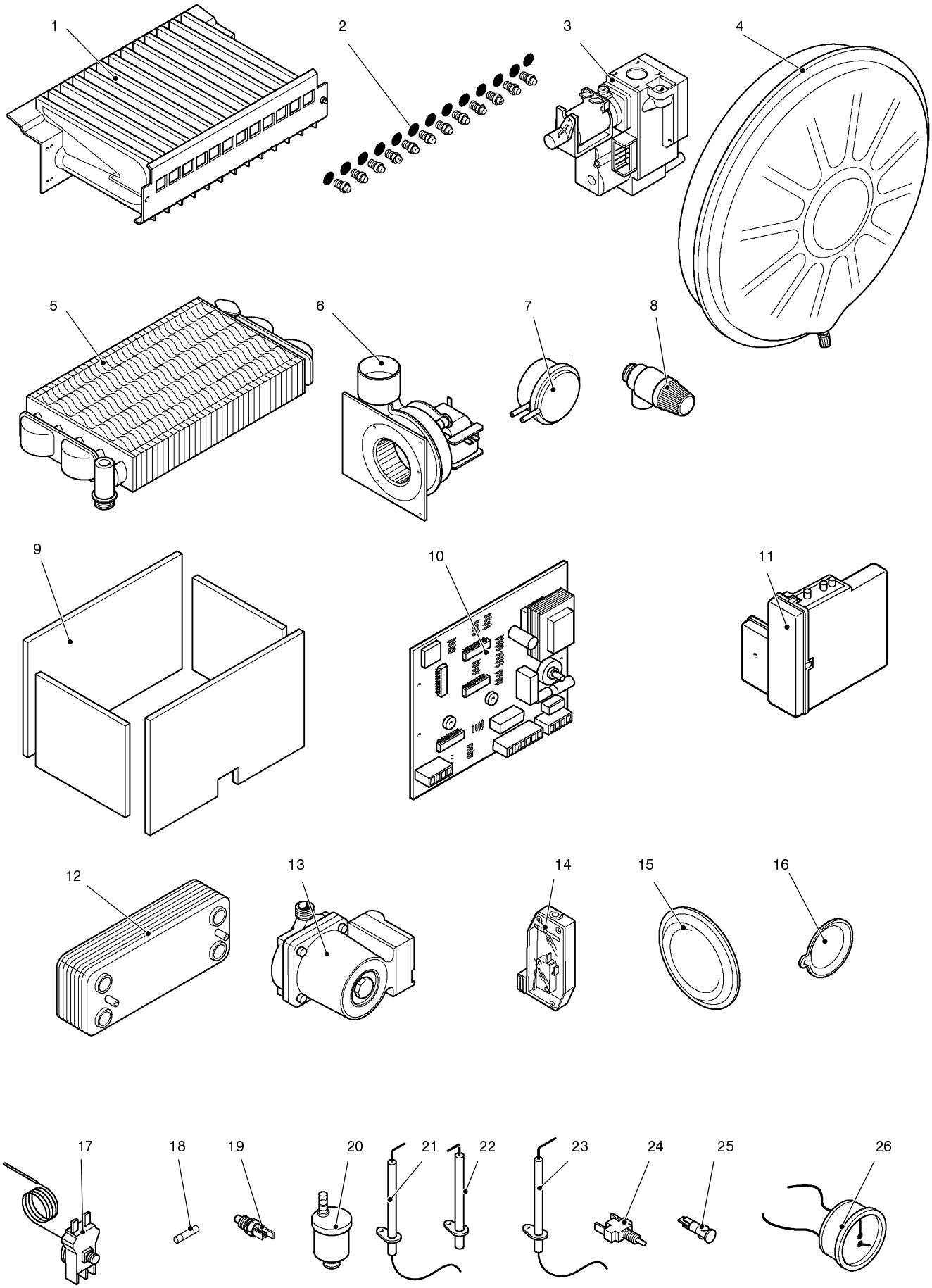
1
2
3
4
5
6
7
8
9
10
11
12
13
14
15
16
17
18
19
20
21
22
23
24
25
26

17962.0499.2 (9711)

17562.0005.0

Spare parts list

Edition December 2000

BIASI

Spare parts list

1 REPLACEMENT PARTS CATALOGUE

This catalogue includes all the replacement parts required for the maintenance and service of Biasi boilers. This edition of the catalogue supersedes all previous editions.

2 MODELS AND SPECIFICATIONS

Biasi produces a number of boilers to satisfy a wide range of user needs and installation requirements.

All boilers are wall mounted, with instantaneous operation and modulating heat regulation; that is, the amount of heat from gas combustion is automatically varied according to the heat required by the heating system.

Biasi boilers differ in two basic characteristics:

2.1 Maximum useful heating power during operation as a building heat source

Two models are available with different maximum useful heating power when used as a building heat source. Each of these models is identified by its own model number:

Models 24, 28

2.2 Mixed – type operation/operation as a building heat source only

Mixed – type boilers are used to heat water for use in a building heating system, and can also heat hot water for domestic use. This type of boiler alternates between the two operating modes, with the "domestic hot water" function taking precedence over the "building heat source" function.

The boilers for "central heating only" operation are identified with the letter "**R**".

3 MODEL IDENTIFICATION CODE/SERIAL NUMBER

Every boiler produced by Biasi carries its own model identification code/serial number.

It is important for the service centre to mention this number when contacting the factory (the number must be listed on guarantee claims and service reports; when making requests for technical information, etc.).

The following is a breakdown of the model identification code/serial number and its meaning (reading from left to right):

A) The maximum useful heating power during operation as a building heat source (see 2.1).

B) The type of boiler according to its functions (see 2.2)

C) The type of gas used by this boiler. The letter "N" is used for Natural; the letter "G" is used for liquefied petroleum gas (LPG).

D) The first five numbers are the actual serial number.

E) The last four numbers indicate the month (first two numbers) and the year of construction.

These numbers are used in this catalogue to distinguish between versions of the same model with different modifications.

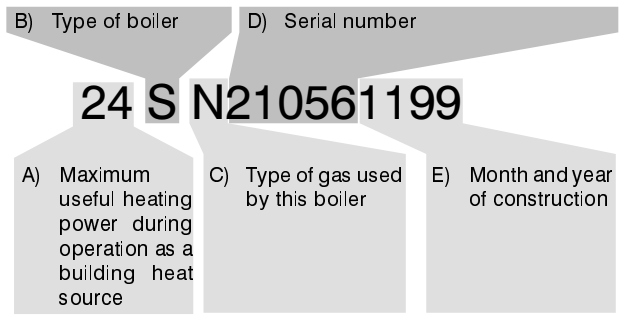

4 REPLACEMENT PARTS CODE

Each currently available replacement part is uniquely identified by its own replacement parts code. The replacement parts code consists of a table code and a position code.

4.1 Table code

The table code is a sequence of letters and numbers which uniquely and clearly identify each table. The table code can be found on the upper right of each table (see 4.3).

A validity chart for the table is located at the bottom of the table. This chart lists the models covered by the table.

				24 SE	
				28 SE	

4.2 Position Code

The position code is a number which is used to identify a particular object on the table.

To make identification easier, position codes for kits have a different format from position codes for individual parts.

515	Position code for a kit (or assembly)	Position code for an individual part	125

A label can be found next to the position code. This label is used to provide additional information on the replacement part and makes identification of the part easier:

A – Type of gas

515 G20	125 G20	G20 = Methane (natural gas)
515 G30 – G31	125 G30 – G31	G30 – G31 = Butane – Propane

B – Validity restrictions

515 (24)	125 (24)	For model 24 KW, only
515 (S)	125 (S)	For mixed – type models (S), only

4.3 Composition of the replacement part code

Each replacement part code includes a table identification code and a position code. A position code is only listed for replacement parts which are currently available.

The replacement part code consists of the table code (which can be found on the upper right of the table) plus the position code (in two formats: individual part or kit).

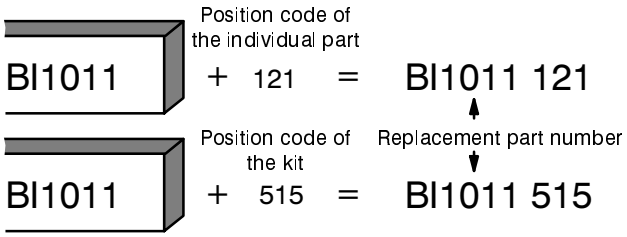

The components of a kit are enclosed in a broken line. A kit may contain other complete kits, or portions of other kits.

In some tables, a replacement part may be identified with an arrow and a complete replacement part code (table code + position code). This means that the part is available, but must be ordered with the code listed. Also, any explanatory notes must be read before ordering.

→		=BI1011 515
→	24 S	=BI1011 515
	24 SR	=BI1011 516

4.4 Using the replacement parts code

The replacement parts code must be included on all documents which are used in service reports, orders for replacement parts, guarantee claims, etc.

Spare parts list

Table		Edition	N° of pages
BI1001 Part 1	Water group	0698	1
BI1011 Part 1	Water group	0698	1
BI1002 Part 2	Water group	1200	1
BI1152 Part 2	Water group	1200	1
BI1013 Part 3	Gas group	1200	1
BI1153 Part 3	Gas group	1200	1
BI1004 Part 4	Template and connection group	0698	1
BI1014 Part 4	Template and connection group	0698	1
BI1015 Part 5	Driving panel and electric parts	0800	1
BI1035 Part 5	Driving panel and electric parts	0500	1
BI1355 Part 5	Driving panel and electric parts	0800	1
BI1365 Part 5	Driving panel and electric parts	0500	1
BI1016 Part 6	External panels, fire chamber	1200	1
BI1276 Part 6	External panels, fire chamber	1200	1
BI1901 Part 1	Spares	0698	1
BI1902 Parte 2	Spares	1200	1

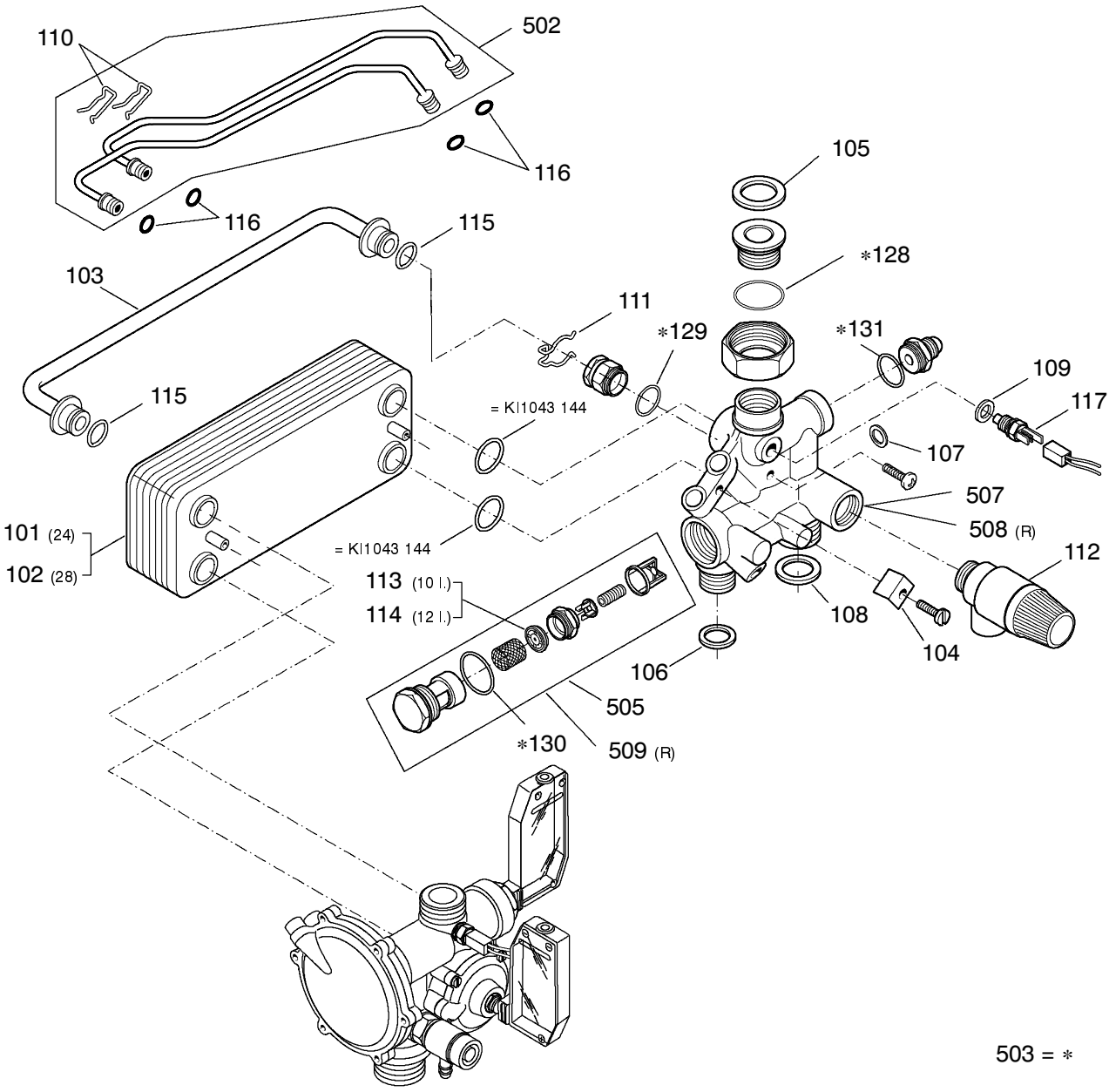

0698

				24 SE				24 SER	
				28 SE					
				24 S				24 SR	
				28 S					

BIASI

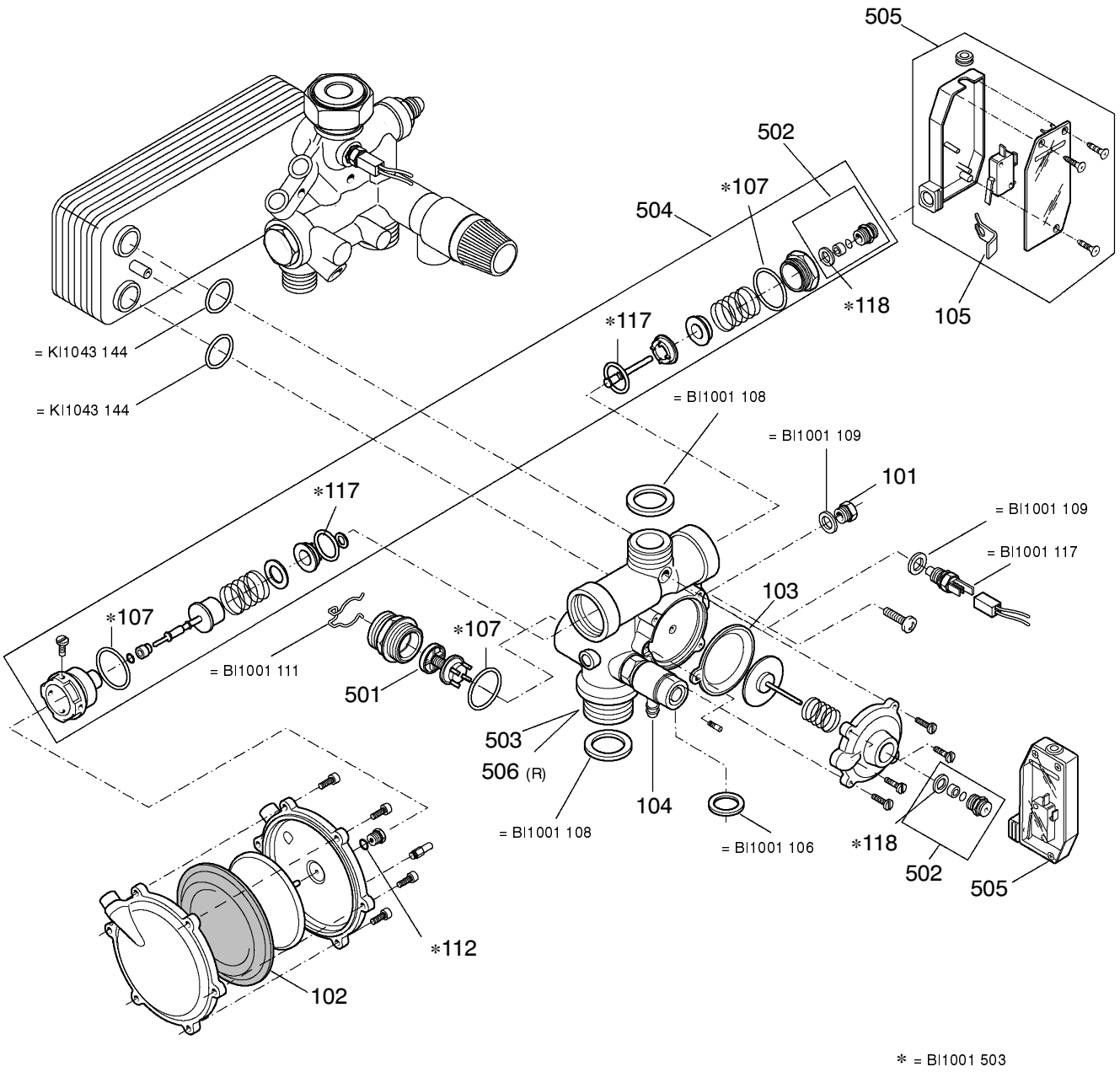

0698

				24 SE				24 SER	
				28 SE					
				24 S				24 SR	
				28 S					

BIASI

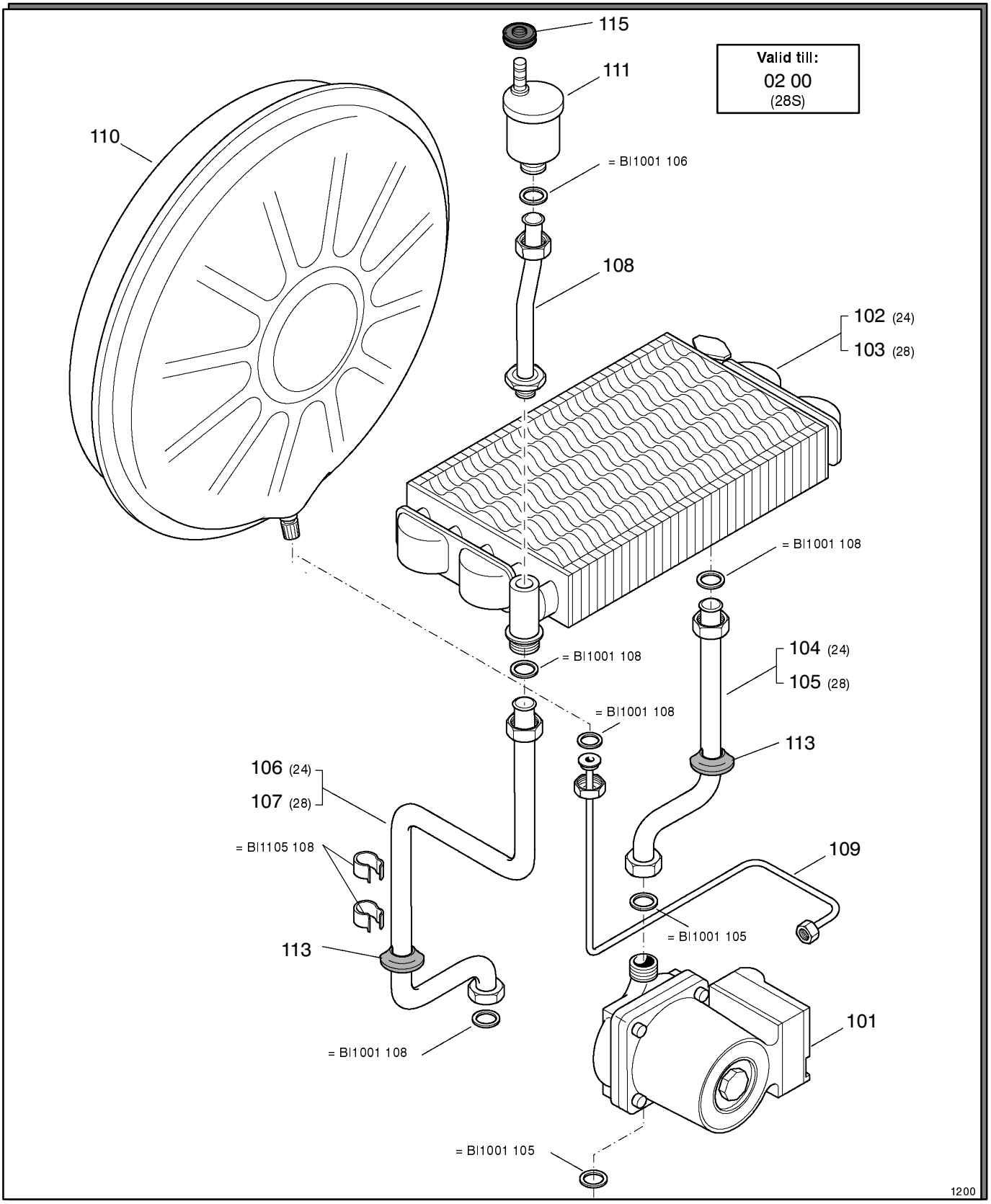

				24 SE				24 SER	
				28 SE					
				24 S				24 SR	
				28 S					

BIASI

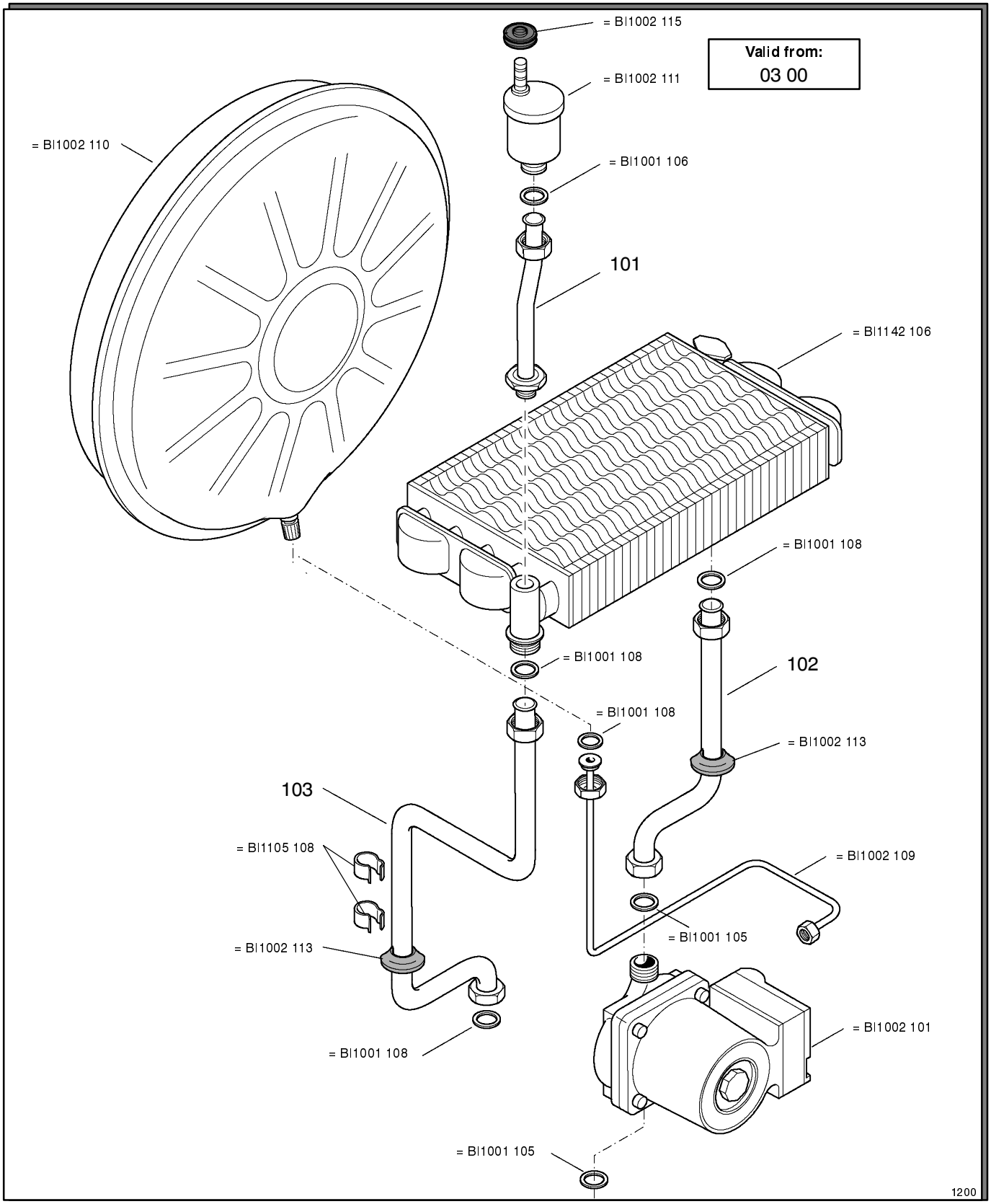
= BI1002 115
Valid from:
03 00
= BI1002 111
= BI1002 110
= BI1001 106
101
= BI1142 106
= BI1001 108
= BI1001 108
102
= BI1001 108
= BI1002 113
103
= BI1105 108
= BI1002 109
= BI1001 105
= BI1002 113
= BI1002 101
= BI1001 108
= BI1001 105
1200

BIASI

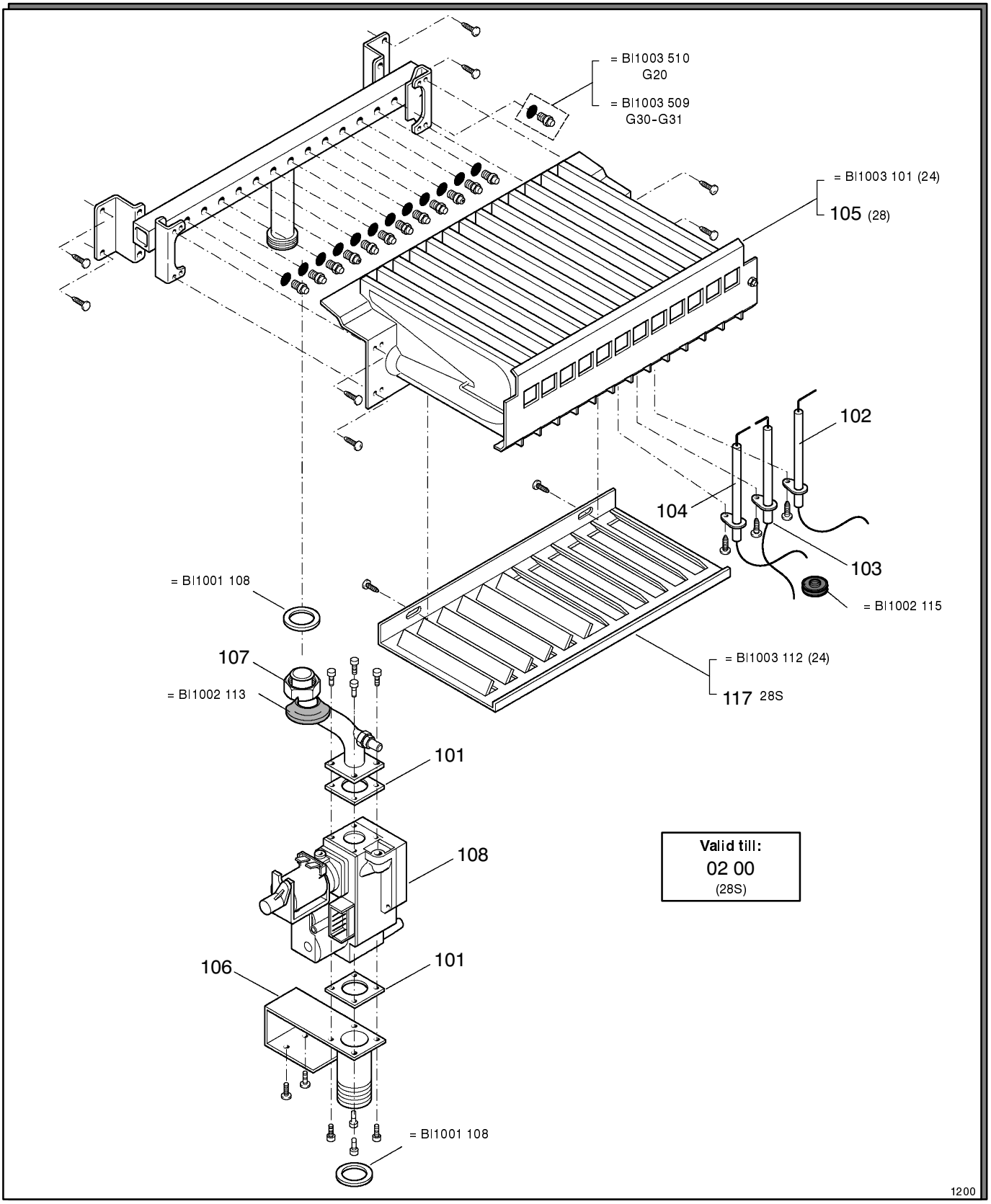

				24 SE				24 SER	
				28 SE					
				24 S				24 SR	
				28 S					

BIASI

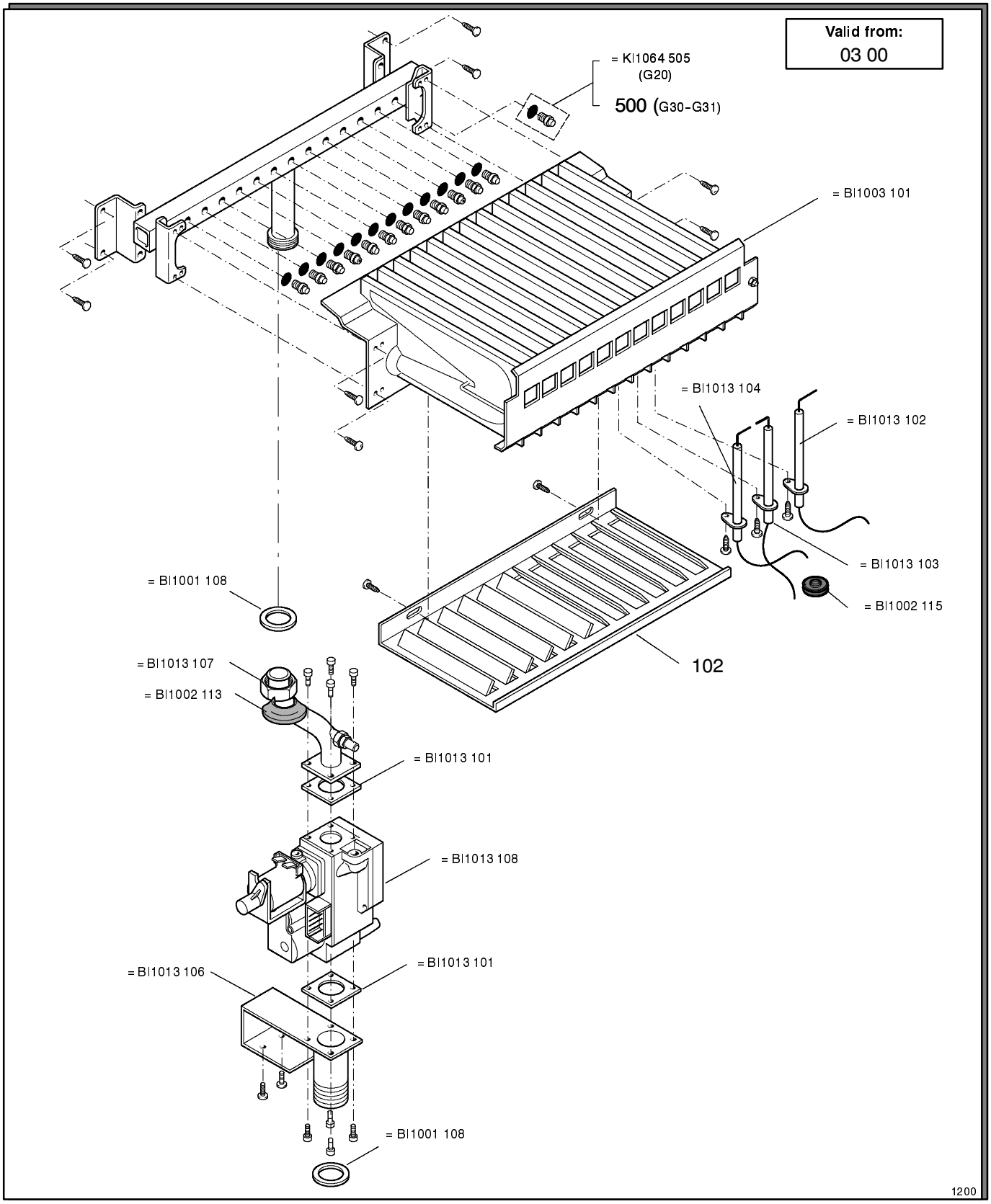
Valid from:
03 00
= KI1064 505
(G20)
500 (G30-G31)
= BI1003 101
= BI1013 104
= BI1013 102
= BI1013 103
= BI1002 115
= BI1001 108
102
= BI1013 107
= BI1002 113
= BI1013 101
= BI1013 108
= BI1013 106
= BI1013 101
= BI1001 108
1200

BIASI

Part 4 - Template and connection group BI1004

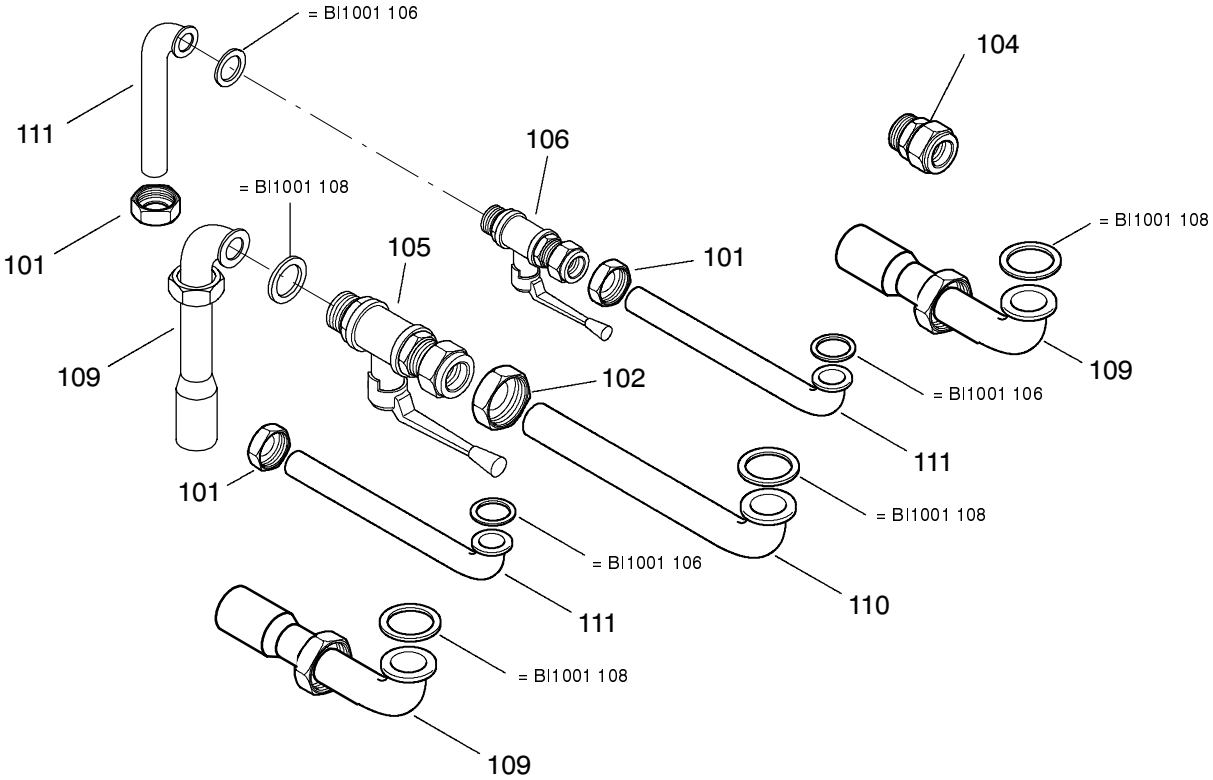

0698

				24 SE				24 SER	
				28 SE					
				24 S				24 SR	
				28 S					

BIASI

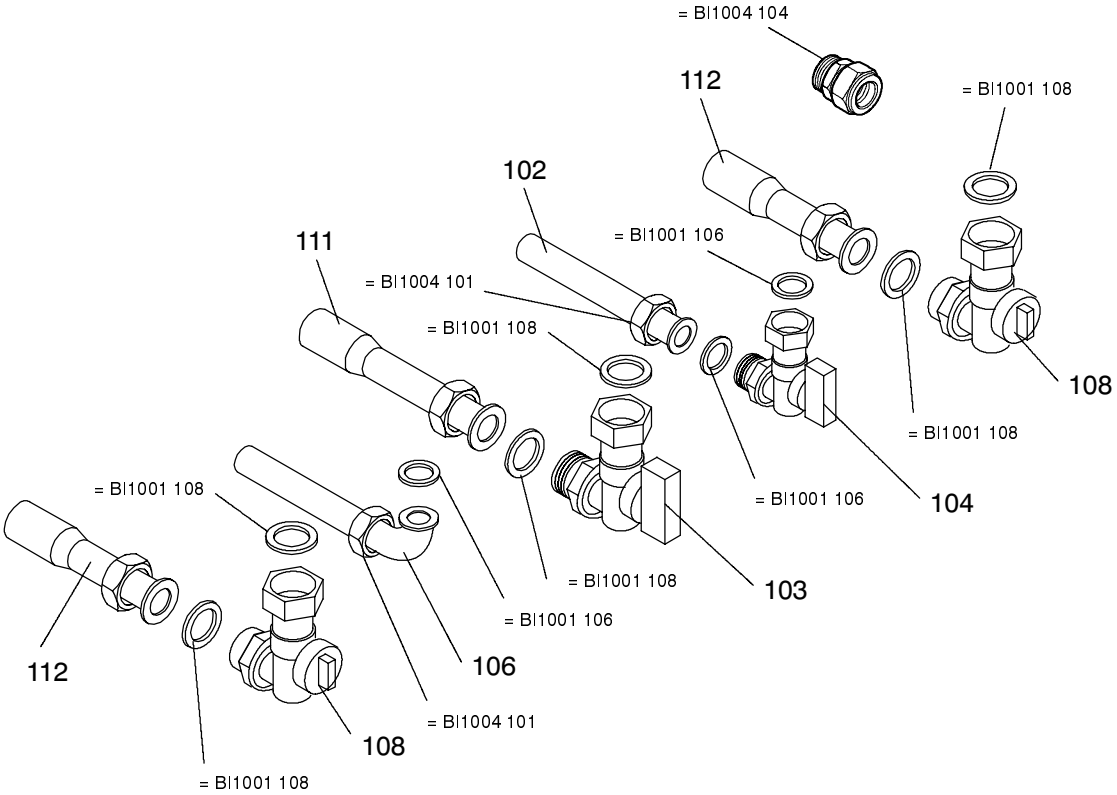

0698

				24 S				24 SR	
				28 S					

BIASI

Part 5 – Driving panel and electric parts BI1015

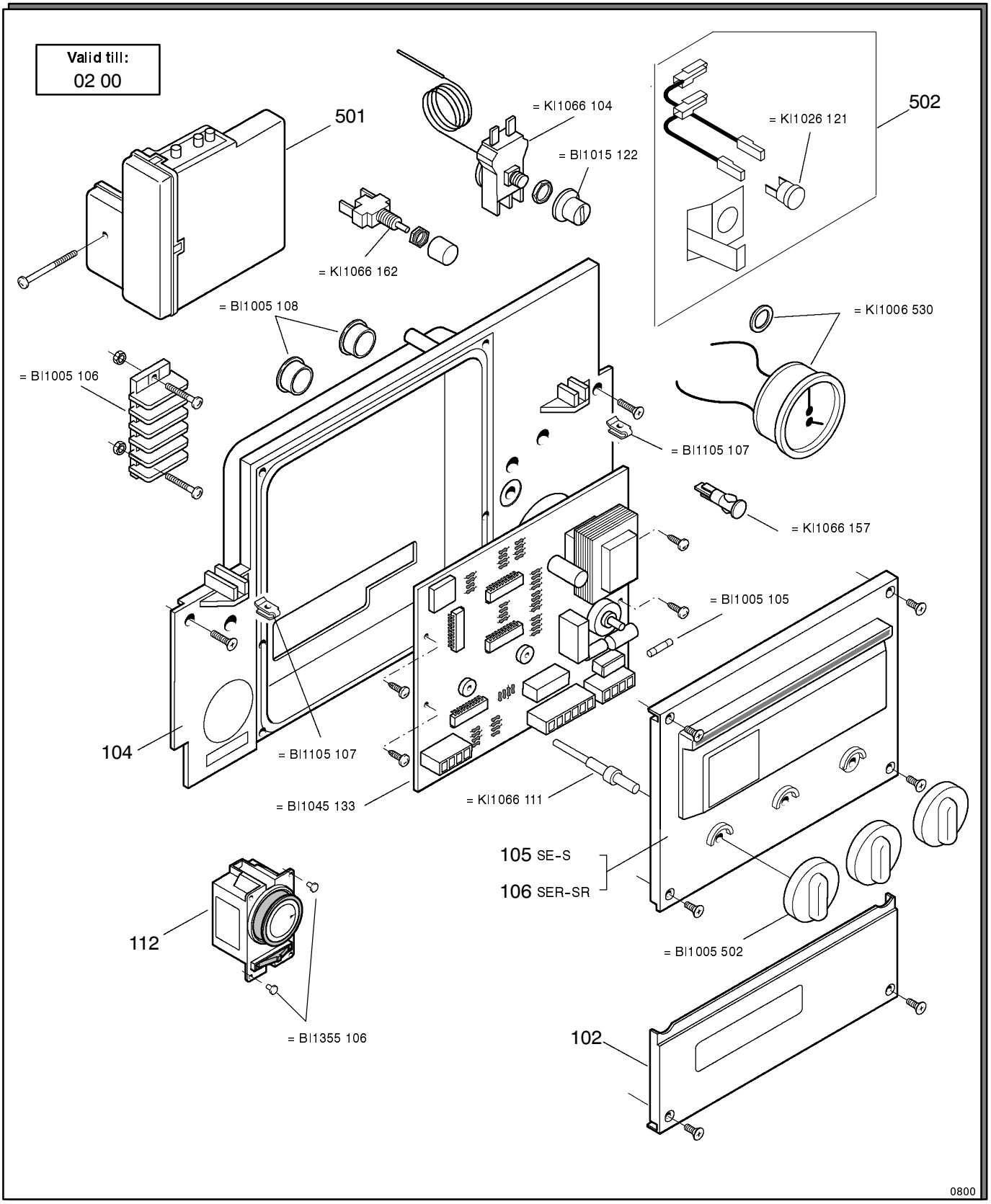

				24 SE				24 SER	
				28 SE					
				24 S				24 SR	
				28 S					

BIASI

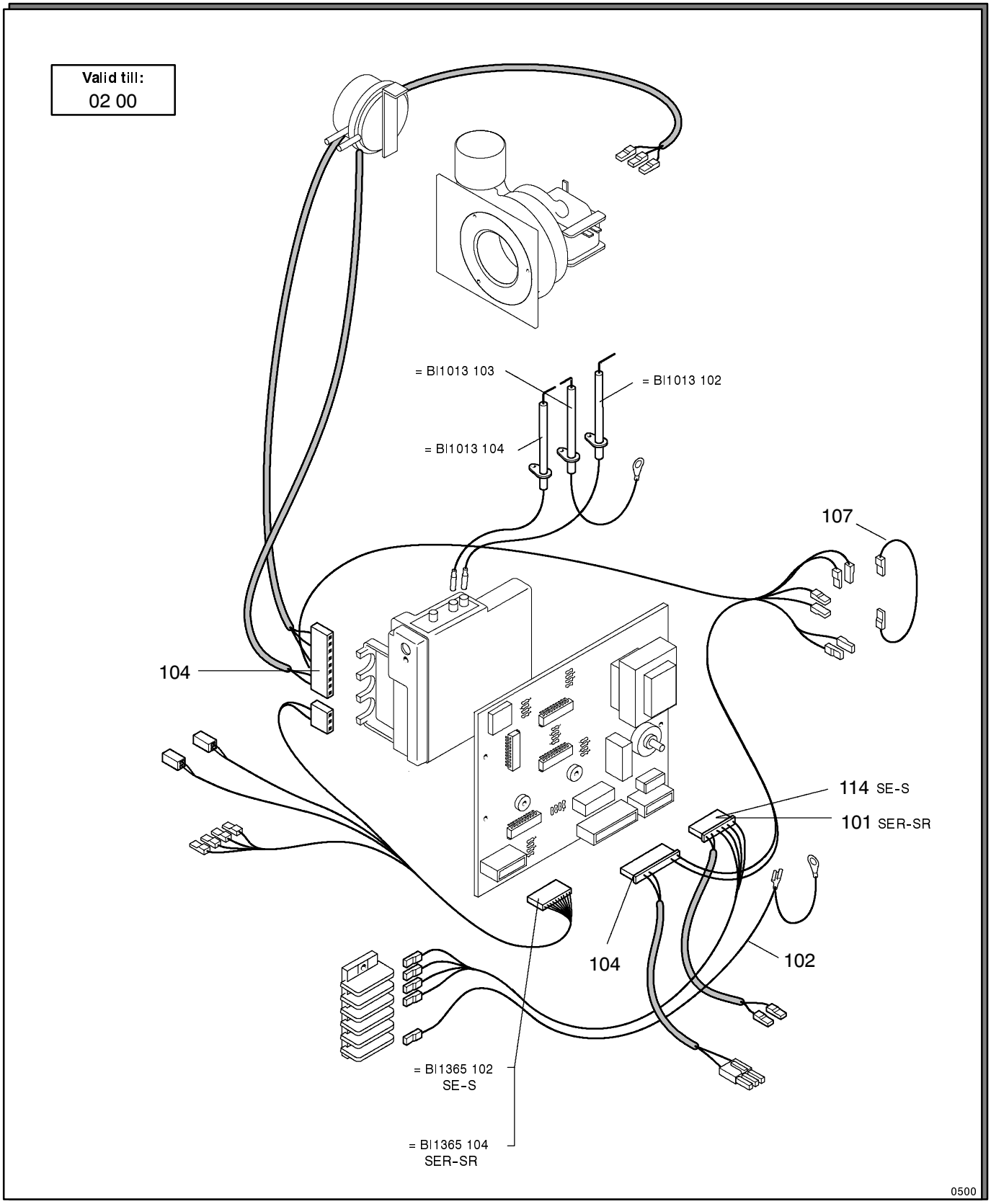

				24 SE				24 SER	
				28 SE					
				24 S				24 SR	
				28 S					

BIASI

Part 5 – Driving panel and electric parts BI1355

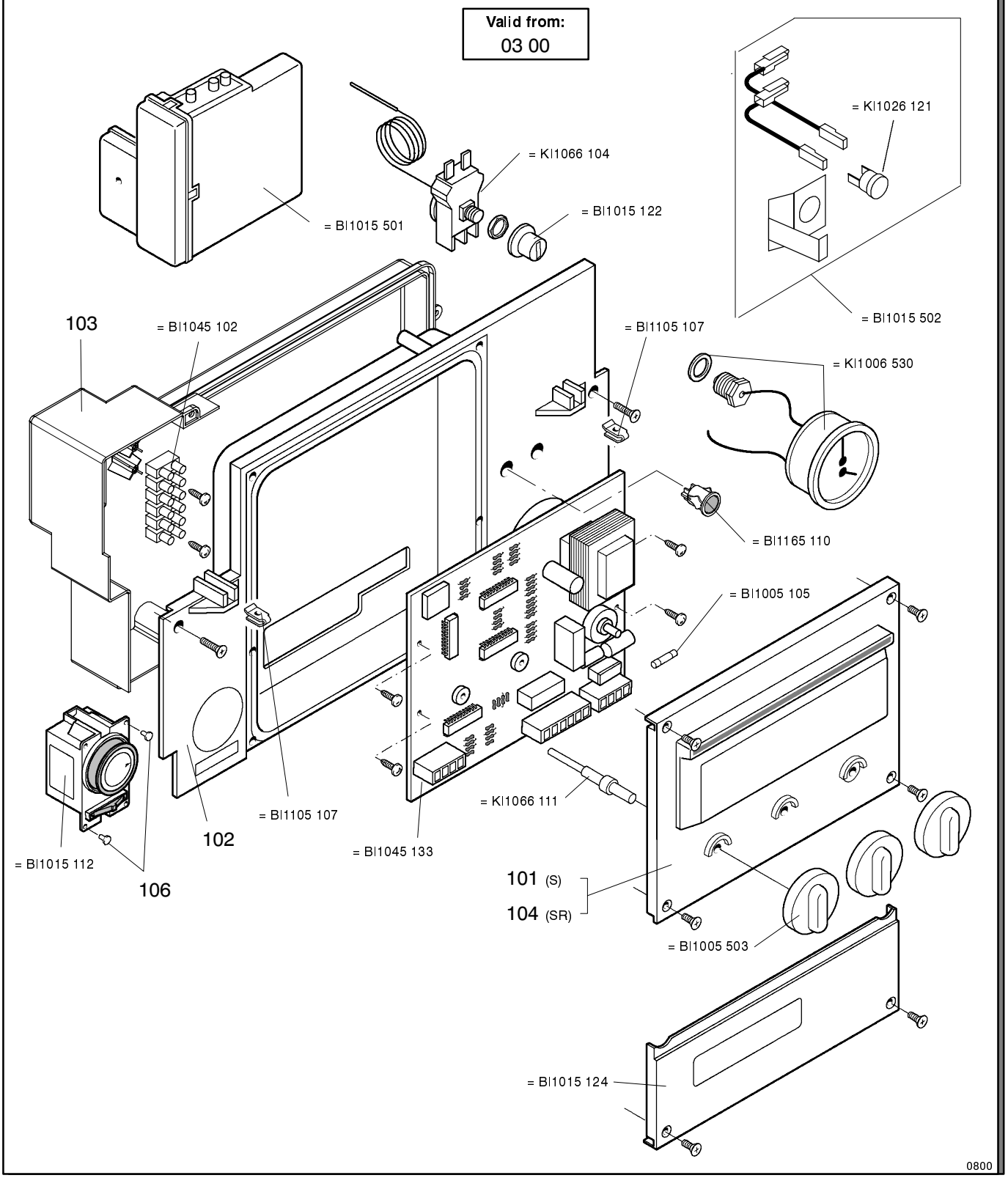

				24 S				24 SR	
				28 S					

BIASI

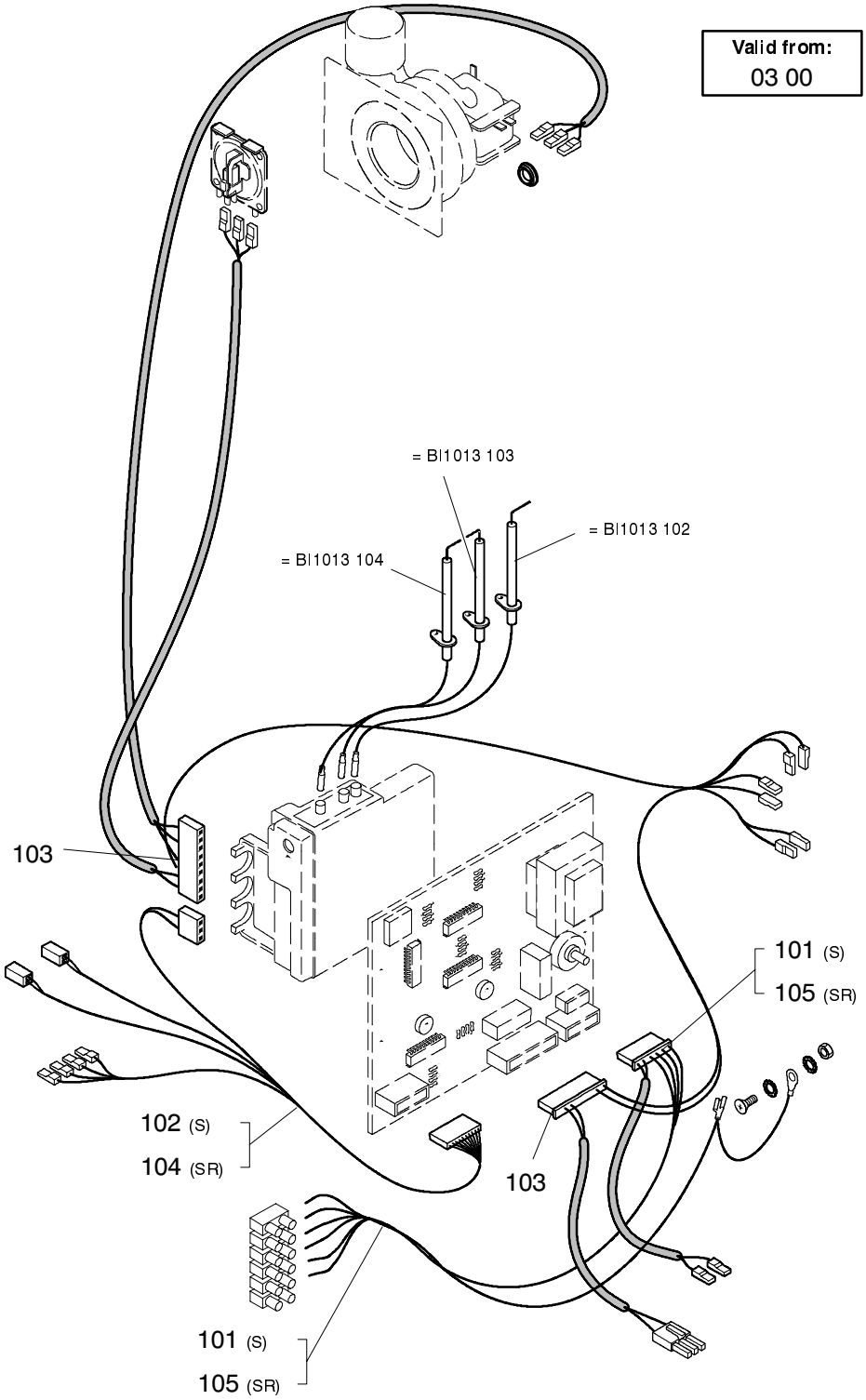

				24 S				24 SR	
				28 S					

BIASI

Part 6 - External panels, fire chamber BI1016

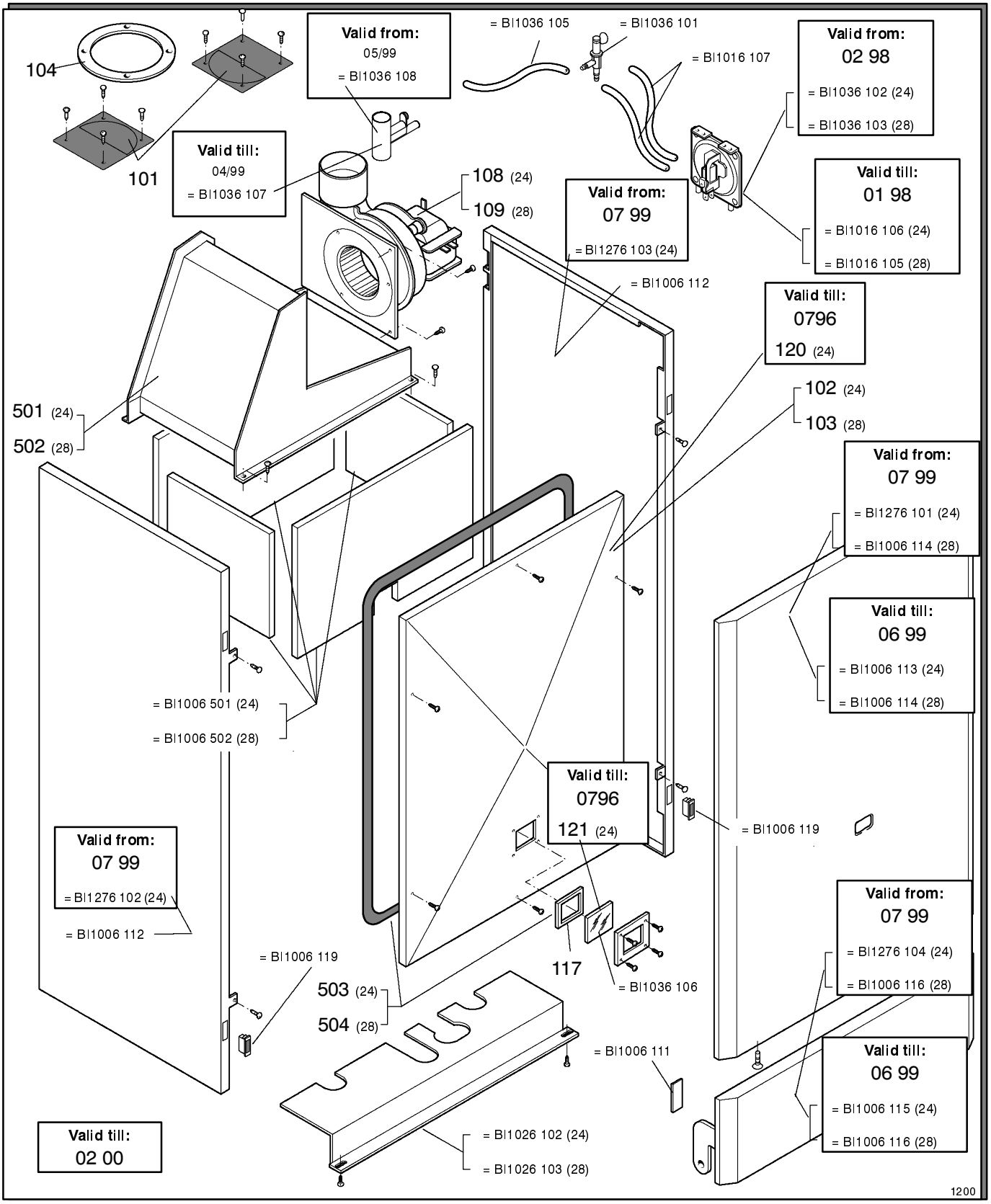

				24 SE				24 SER	
				28 SE					
				24 S				24 SR	
				28 S					

BIASI

Part 6 - External panels, fire chamber BI1276

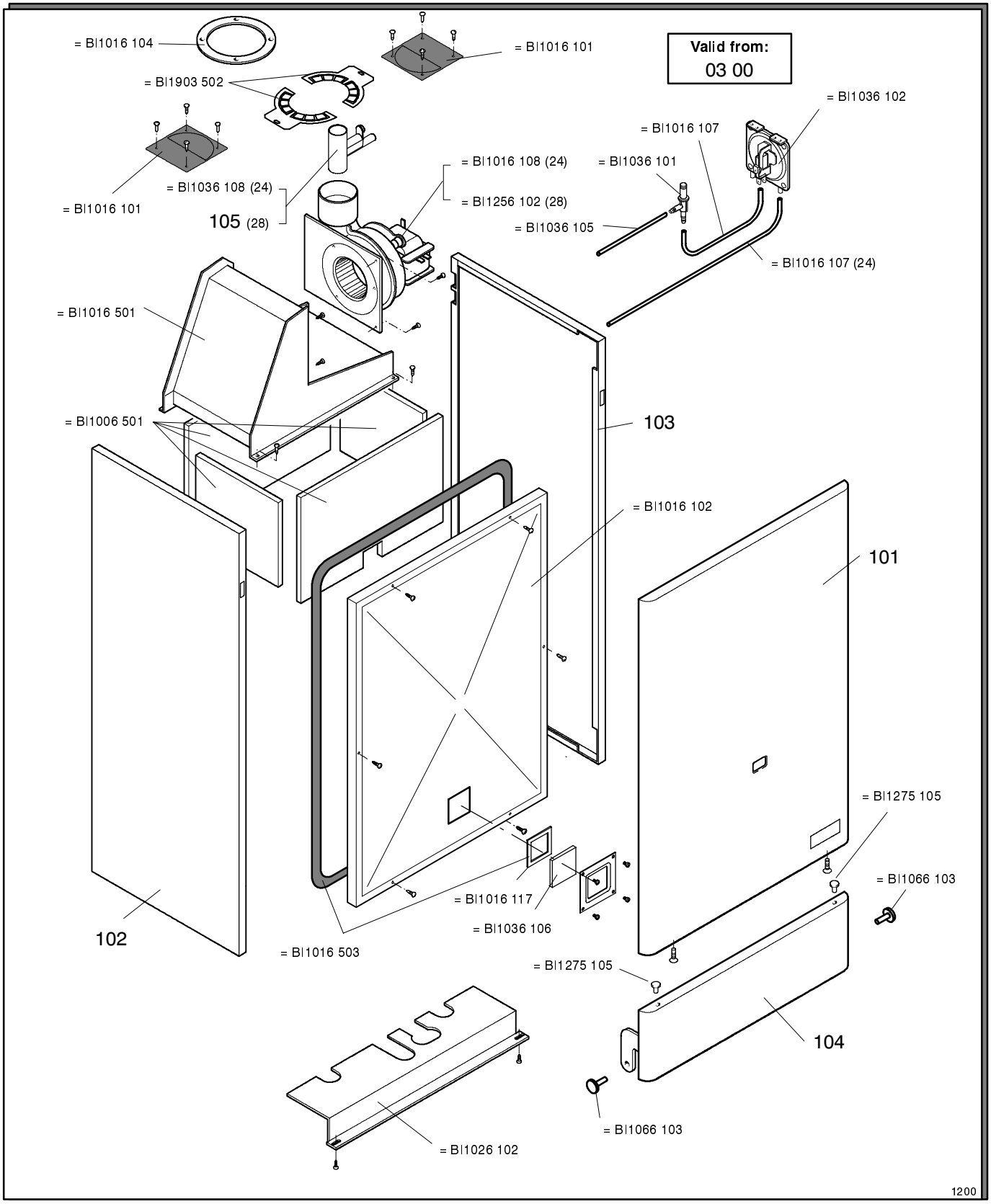

				24 S				24 SR	
				28 S					

BIASI

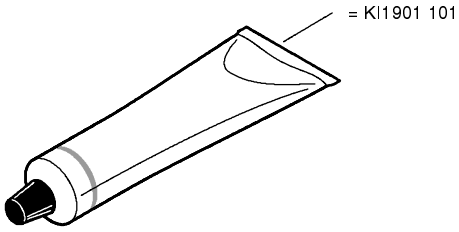

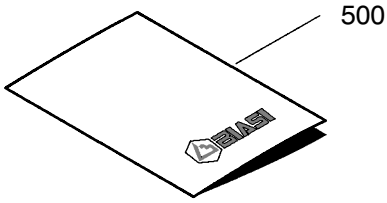

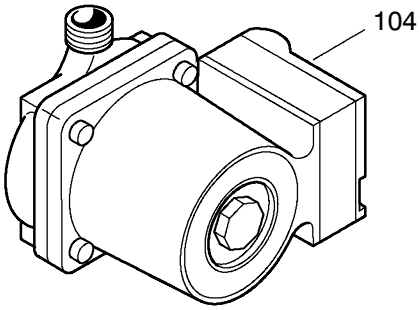

803			O-ring packing set	
Part	*Pos.*	*N.*	*T.*	*Size*
BI1001	115	10		12,42 x 1,78
KI1043	144	10		18,64 x 3,53
BI1001	503	10		
BI1013	101	10		

802			Flat packing set	
Part	*Pos.*	*N.*	*T.*	*Size*
BI1001	107	10	P	1/4”
BI1001	109	10	P	3/8”
BI1001	106	10	P	1/2”
BI1001	108	10	P	3/4”
BI1001	105	10	P	1”

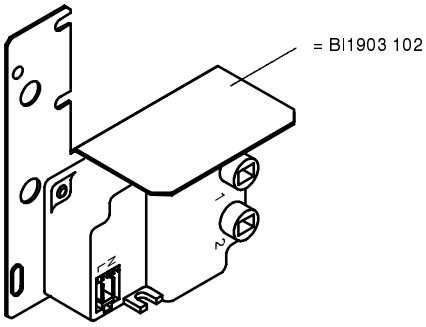

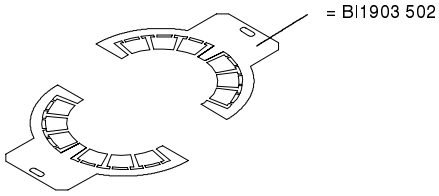

0698

				24 SE				24 SER	
				28 SE					
				24 S				24 SR	
				28 S					

BIASI

	806	**Basic spares**
Part	*Pos. N.*	*Description*
BI1001	101 1	D.H.W. exchanger 24KW
BI1001	104 5	D.H.W. pressure switch pipe fixing clamp
BI1001	110 5	D.H.W. pressure switch pipes fixing fork
BI1001	111 5	By-pass pipe fixing fork
BI1001	112 1	3 bar safety valve
BI1001	117 2	NTC temperature probe
BI1001	505 1	D.H.W. filter and pressure reducing valve kit
BI1011	102 1	D.H.W. pressure switch membrane
BI1011	103 1	Central heating pressure switch membrane
BI1011	105 5	Microswitch box fixing clip
BI1011	501 1	By-pass kit
BI1011	504 1	Directional valve actuators kit
BI1011	505 1	Microswitch kit
BI1002	101 1	MYSON pump CP 35W
BI1002	102 1	Main exchanger 24KW
BI1002	111 1	Air purger valve
BI1003	509 1	LPG conversion kit
BI1003	510 1	Natural gas conversion kit
BI1013	102 1	Detection electrode
BI1013	103 1	Ignition electrode right
BI1013	104 1	Ignition electrode left
BI1013	108 1	Honeywell VK4105 gas valve regulator
BI1005	105 10	Delayed fuse 250V-1,6A
KI1006	530 1	Pressure/temp gauge kit
BI1045	133 1	Electronic circuit board
KI1066	104 1	Overheat thermostat
BI1015	112 1	Clock
BI1015	501 1	Ignition board kit
BI1036	102 1	Flue pressure switch 24 KW
BI1036	103 1	Flue pressure switch 28 KW
BI1016	108 1	Fan 24 KW
KI1901	101 1	Grease
BI1901	803 1	O-ring gaskets set
BI1901	802 1	Flat gaskets set

				24 SE				24 SER	
				28 SE					
				24 S				24 SR	
				28 S					