IDEAL CLASSIC

RS 50 P & RS 60 P

Wall Mounted, Balanced Flue Gas Boilers.

Installation & Servicing.

CAUTION: To avoid the possibility of injury during the installation, servicing or cleaning of this appliance, care should be taken when handling edges of sheet steel components.

IMPORTANT: *This appliance is for use with* ***L.P.G. (PROPANE) ONLY.***

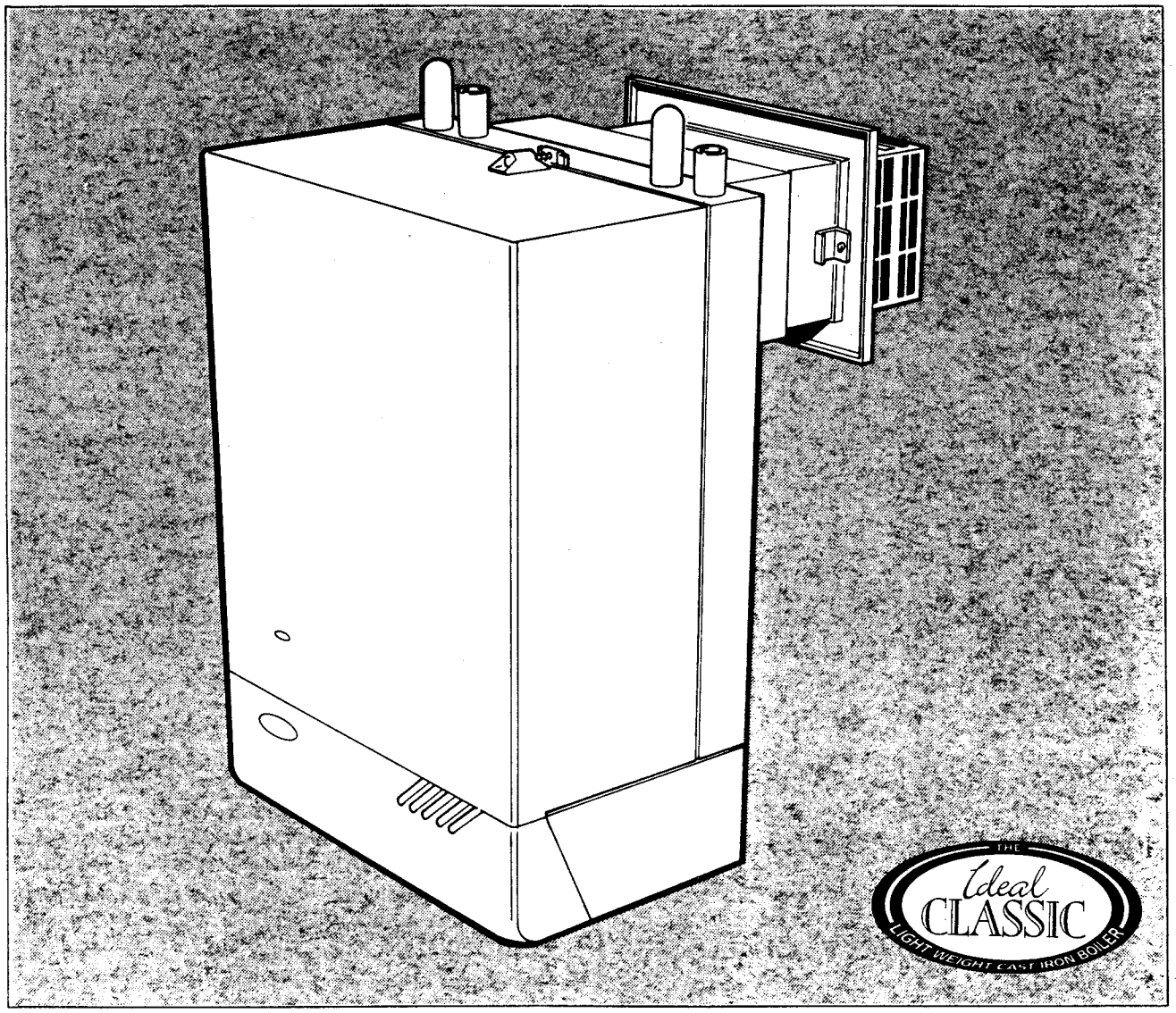

NOTE TO THE INSTALLER: LEAVE THESE INSTRUCTIONS ADJACENT TO THE APPLIANCE

Table 1- GENERAL DATA

Boiler Size		RS 50 P	RS 60 P
Main burner bar		Aeromatic AC 19/123 280 with internal gauze	Aeromatic AC 19/123 281 with internal gauze
Gas control		HONEYWELL V 4700E 1072, 240 V	
Burner Injector	BRAY	Cat. 10 Size 540	Cat. 10 Size 650
Pilot injector		HONEYWELL 458 01075 - 003 (stamped 20 / 23p)	
Gas supply connection	(in. BSP)	Rc 1/2 (1/2)	
Flow connections - PUMPED & GRAVITY		22 mm copper *(Gravity must be increased to 28 mm at the boiler)*	
Return connections - PUMPED & GRAVITY		22 mm copper *(Gravity must be increased to 28 mm at the boiler)*	
Maximum static water head	m (ft.)	30.5 (100)	
Minimum static water head	m (ft.)	0.45 (1.5)	
Electrical supply		240 V ~ 50 Hz	
External fuse rating		3 A	
Water content	litre (gal.)	3.65 (0.8)	4.6 (1.0)
Dry weight	kg (lb)	39.0 (86.0)	44.0 (97.0)
Maximum installation weight	kg (lb)	34.0 (75.0)	40.5 (89.0)
Boiler size	Height mm (in.)	600 (23.6)	
	Width mm (in.)	380 (15.0)	
	Depth mm (in.)	300 (11.8)	

Table 2- PERFORMANCE DATA

Boiler Size		RS 50 P	RS 60 P
Boiler input	kW (Btu/h)	18.3 (62 400)	21.7 (74 000)
	Gas consumption l/s (ft³/h)	0.19 (24.3)	0.226 (28.8)
Boiler output	kW (Btu/h)	14.6 (49 800)	17.4 (59 200)
Burner setting pressure (HOT)	mbar (in.w.g.)	36.5 (14.7)	

To obtain gas consumption

(a) For l/s; divide heat input (kW) by C.V. of the gas (MJ/m³).

(b) For ft³/h; divide heat input (Btu/h) by C.V. of the gas (Btu/ft³).

GENERAL

INTRODUCTION

The **Ideal Classic** RS 50 P and RS 60 P are wall mounted, balanced flue, natural draught gas boilers.

They provide central heating outputs of 14.6kW (49 800 Btu/h) and 17.4kW (59 200 Btu/h).

The boiler casing is of white enamelled mild steel with a removable controls pod containing a drop down door.

The boiler thermostat is located behind the controls access door, in the box mounted on the gas valve.

A **Programmer Kit**, which fits neatly within the casing, is available as an optional extra. Separate fitting instructions are included with this kit.

The boilers are suitable, as standard, for connection to open vented systems ONLY.

An **Overheat Thermostat Kit** is available to allow the boiler to be used on sealed water systems.

A complete **Sealed System Module**, which fits on top of the appliance is also available as an optional extra.

The boiler is suitable for connection to pumped, open vented central heating systems; pumped central heating combined with pumped, or gravity, indirect domestic hot water systems; gravity or pumped, indirect domestic hot water supply systems.

See Frame 3 for details of the correct boiler tappings to use.

The boilers are suitable for the following wall thicknesses;

114 mm (4 1/2 in) to 191 mm (7 1/2 in),

229 mm (9 in) to 305 mm (12 in),

318 mm (12 1/2 in) to 394 mm (15 1/2 in) and

406 mm (16 in) to 584 mm (23 in.)

Wall thicknesses outside of these sizes cannot be accommodated.

Gas Safety (Installation and Use) Regulations, 1984

It is law that all gas appliances are installed by competent persons (e.g. CORGI identified by) in accordance with the above Regulations. Failure to install appliances correctly could lead to prosecution. It is in your own interest and that of safety, to ensure the law is complied with.

The installation of the boiler MUST also be in accordance with the latest I.E.E. Wiring Regulations, the Local Building Regulations, the by-laws of the Local Water Authority, the Building Regulations and the Building Standards (Scotland) and any relevant requirements of the Local Authority.

Detailed recommendations are contained in the following British Standard Codes of Practice:

BS. 5482:1	Domestic butane and propane burning appliances.
BS. 6891	Low pressure installation pipes.
BS. 6798	Installation of gas fired hot water boilers of rated input not exceeding 60 kW.
BS. 5449	Forced circulation hot water systems.
BS. 5546	Installation of gas hot water supplies for domestic purposes (2nd Family Gases).
BS. 5440:1	Flues (for gas appliances of rated input not exceeding 60 kW).
BS. 5440:2	Ventilation (for gas appliances of rated input not exceeding 60 kW).

Manufacturer's notes must NOT be taken in any way as overriding statutory obligations.

INTRODUCTION - GAS SUPPLY

IMPORTANT. These appliances are certificated by the British Standards Institution for safety and performance. It is, therefore, important that no external control devices, e.g. flue dampers, economisers etc., are directly connected to these appliances - unless covered by these 'Installation and Servicing' instructions or otherwise recommended by Caradon Heating Ltd. in writing. If in doubt please enquire

Any direct reconnection of a control device not approved by Caradon Heating Ltd. could invalidate the B.S.I. Certification and the normal appliance warranty. It could also infringe the Gas Safety Regulations and the above Regulations.

GAS SUPPLY

The Local Propane Gas Supplier should be consulted, at the installation planning stage, in order to establish the availability of an adequate supply of gas.

Installation pipes, cylinders and pressure regulators should be fitted in accordance with BS. 5482:1. Bulk tank installations must comply with the requirements of the Home Office Code of Practice for the storage of liquefied petroleum gas at fixed installations.

The complete installation must be tested for soundness as described in the above standard.

LOCATION OF BOILER

The boiler MUST be installed on a flat and vertical external wall, capable of adequately supporting the weight of the boiler and any ancillary equipment.

The boiler may be fitted on a combustible wall and insulation between the wall and the boiler is not necessary - unless required by the Local Authority. THE BOILER IS NOT SUITABLE FOR EXTERNAL INSTALLATION.

IMPORTANT NOTICE. If the boiler is to be fitted in a timber framed building it should be fitted in accordance with the British Gas publication 'Guide for Gas Installations in Timber Frame Housing', Reference DM2. If in doubt advice must be sought from the Local Gas Region of British Gas.

The boiler may be installed in any room or internal space, although particular attention is drawn to the requirements of the current I.E.E. Wiring Regulations and, in Scotland, the electrical provisions of the Building Regulations applicable in Scotland with respect to the installation of the boiler in a room or internal space containing a bath or shower.

Where a room-sealed appliance is installed in a room containing a bath or shower then the appliance and any electrical switch or appliance control utilising mains electricity should be so situated that it cannot be touched by a person using the bath or shower.

Where installation will be in an unusual location, special procedures may be necessary and BS. 6798 gives detailed guidance on this aspect.

A compartment used to enclose the boiler MUST be designed and constructed specially for this purpose. An existing cupboard or compartment may be used, provided it is modified for the purpose. Details of essential features of cupboards / compartment design, including airing cupboard installation are given in BS. 6798.

In siting the boiler, the following limitations MUST be observed:

1. The position selected for installation MUST allow adequate space for servicing in front of the boiler and for air circulation around the boiler. For the minimum clearances required for safety and subsequent service, see the Wall Mounting Template, Frame 6 and Frame 7. In addition sufficient space may be required to allow lifting access on to the wall mounting plate.

GENERAL

2. The position MUST also permit the provision of a satisfactory balanced flue termination.

FLUE INSTALLATION

The flue must be installed in accordance with the recommendations of BS. 5440:1.

The following notes are intended for general guidance.

1. The boiler MUST be installed so that the terminal is exposed to external air.
2. It is important that the position of the terminal allows the free passage of air across it at all times.
3. Minimum acceptable spacings from the terminal to obstructions & ventilation openings are specified in Table 3.
4. Where the lowest part of the terminal is fitted less than 2 m (6.6 ft.) above a balcony, above ground or above a flat roof to which people have access then the terminal MUST be protected by a purpose designed guard.

   Terminal guards are available from:

   Quinnel, Barret & Quinnel Ltd.,
   884 Old Kent Road, London, SE 15 (Model P6)

   and from,

   Tower Flue Components Ltd.,
   Vale Rise, Tonbridge, Kent, TN9 1TB (Model C).

   Ensure that the guard is fitted centrally.
5. Where the terminal is fitted within 850 mm (34 in.) of a plastic or painted gutter or 450 mm (18 in.) of painted eaves then an aluminium shield at least 750 mm (30 in.) long should be fitted to the underside of the gutter or painted surface.
6. The air inlet/ products outlet duct and the terminal of the boiler MUST NOT be closer than 25 mm (1 in.) to combustible material. Detailed recommendations on the protection of combustible material are given in BS. 5440:1 1990.

   IMPORTANT. It is absolutely ESSENTIAL to ensure, in practice, that products of combustion discharging from the terminal cannot re-enter the building or any other adjacent building through ventilators, windows, doors, other sources of natural air infiltration, or forced ventilation/ air conditioning.

If this should occur, the appliance MUST be turned OFF immediately and the Local Propane Gas Supplier consulted.

TERMINAL

The terminal assembly can be adapted to accomodate various wall thicknesses, refer to Frame 1 'Unpacking'.

AIR SUPPLY

Detailed recommendations for air supply are given in BS. 5440:2. The following notes are for general guidance:

1. It is NOT necessary to have a purpose provided air vent in the room or internal space in which the boiler is installed.
2. If the boiler is to be installed in a cupboard or compartment, permanent air vents are required (for cooling purposes) in the cupboard/ compartment, at both high and low levels. The air vents must either communicate with room/internal space, or be direct to outside air. The minimum effective areas of the permanent air vents, required in the cupboard/ compartment, are [illegible] as follows and are related [illegible]

FLUE INSTALLATION - AIR SUPPLY

3. Both air vents MUST communicate with the same room or internal space, or MUST be on the same wall to outside air.
4. In siting the air vents care must be taken to avoid the freezing of pipework.

Refer to Tables 4 & 5 for details of air vent position and sizing.

Table 3 - BALANCED FLUE TERMINAL POSITION

Terminal Position	Minimum Spacing
1. Directly below an openable window, air vent or other ventilation opening.	300 mm (12 in.)
2. Below guttering, drain pipes or soil pipes.	300 mm (12 in.)
3. Below eaves.	300 mm (12 in.)
4. Below balconies or a car port roof.	600 mm (24 in.)
5. From vertical drain pipes or soil pipes.	75 mm (3 in.)
6. From internal or external corners.	600 mm (24 in.)
7. Above adjacent ground, roof or balcony level.	300 mm (12 in.)
8. From a surface facing the terminal.	600 mm (24 in.)
9. From a terminal facing a terminal.	600 mm (24 in)
10. From an opening in a car port (eg. door or window) into dwelling.	1200 mm (48 in)
11. Vertically from a terminal on the same wall.	1500 mm (60 in)
12. Horizontally from a terminal on the wall.	300 mm (12 in.)

Table 4 - RS 50 P AIR SUPPLY

Position of air vent		Air from room/ internal space	Air direct from outside
HIGH LEVEL	cm^2	165	83
	(in^2)	(26)	(13)
LOW LEVEL	cm^2	165	83
	(in^2)	(26)	(13)

Table 5 - RS 60 P AIR SUPPLY

Position of air vent		Air from room/ internal space	Air direct from outside
HIGH LEVEL	cm^2	196	98
	(in^2)	(31)	(16)
LOW LEVEL	cm^2	196	98
	(in^2)	(31)	(16)

WATER CIRCULATION SYSTEM

The boiler must NOT be used for direct hot water supply. For the types of system and correct piping procedure - see Introduction and Frame 3.

Note. All water connections MUST be made to the boiler TOP tappings.

The central heating system should be in accordance with BS. 6798 and in addition, for Smallbore and Microbore systems, BS 5449. The domestic hot water system, if applicable, should be in accordance with the relevant recommendations of BS. 5546. Copper tubing to BS. 2871:1 is recommended for water carrying pipework.

The hot water storage cylinder MUST be of the indirect type and should preferably be manufactured of copper.
Single-feed, indirect cylinders are not recommended and MUST NOT be used on sealed systems.

The appliances are NOT suitable for gravity central heating systems, with or without additional gravity domestic hot water supply, nor are they suitable for the provision of gravity domestic hot water requirements above a 181.8 litre (40 gal) tank capacity, depending on the model.

The hot water cylinder & ancillary pipework, not forming part of the useful heating surface, should be lagged to prevent heat loss & any possible freezing - particularly where pipes run through roof spaces & ventilated under floor spaces.

The boiler must be vented. If venting cannot be done via a flow connection then a separate vent MUST be fitted by the installer. This does NOT mean that more than one open vent is required. Other parts of the system, which may become unavoidably air locked, can be automatically vented.

Draining taps MUST be located in accessible positions, which permit the draining of the whole system - including the boiler and hot water storage vessel.
Draining taps should be at least 1/2 in. BSP nominal size and be in accordance with BS 2879.

The boiler is fitted with a special drain plug which is provided to drain the BOILER ONLY in the event of the system drain plug being unable to do so.

The hydraulic resistances of the boilers, at MAXIMUM OUTPUT with an 11°C (20°F) temperature differential, are shown in Table 8.

THERMOSTATIC RADIATOR VALVES

Caradon Heating Ltd. recommend that heating systems utilising full thermostatic radiator valve control of temperature in individual rooms should also be fitted with a room thermostat controlling the temperature in a space served by radiators not fitted with such a valve.

When thermostatic radiator valves are used, the space heating temperature control over a living / dining area or a hallway having a heating requirement of at least 10 % of the boiler heat output is achieved using a room thermostat whilst other rooms are individually controlled by thermostatic radiator valves. However, if the system employs thermostatic radiator valves on all radiators then a by-pass must be fitted in order to ensure a flow of water, should all the T.R.V's be in the closed position.

Table 6 - WATER FLOW RATE AND PRESSURE LOSS

Boiler Size		RS 50 P	RS 60 P
Boiler output	kW	14.6	17.4
	Btu/h	59 800	59 200
Water flow rate	l/min	18,9	22.4
	gal/h	249	296
Pressure loss	mbar	31.5	41.7
	in.w.g.	12.6	16.7

ELECTRICAL SUPPLY

Wiring external to the appliance MUST be in accordance with the current I.E.E. Wiring Regulations and any Local Regulations which apply.

The boiler is supplied for 240 V ~ 50 Hz
Single Phase
Fuse Rating is 3 A

The method of connection to the mains electricity supply MUST facilitate complete electrical isolation of the boiler, preferably by the use of a fused, unswitched three pin plug and a shuttered socket outlet, both complying with the requirements of BS. 1363.

Alternatively, a fused double pole switch, having at least a 3 mm (1/8 in.) contact separation in both poles and servicing only the boiler, may be used.

The point of connection to the mains should be readily accessible and adjacent to the boiler, except that for bathroom installations, the point of connection to the mains MUST be situated outside of the bathroom.

Note. Where a room sealed appliance is installed in a room containing a bath or shower then the appliance and any electrical switch or apppliance control utilising mains electricity should be so situated that it cannot be touched by a person using the bath or shower.

INSTALLATION UNPACKING - BOILER ASSEMBLY

1 UNPACKING

The boiler is supplied fully assembled in one pack 'A' together with one of four packs, B, B1, C & D, containing the flue terminal appropriate to the wall thickness. Optional extras, if ordered, (Programmer Kit, complete Sealed System Module and Overheat Thermostat Kit) are supplied in separate boxes.

PACK 'A' CONTENTS
- Complete boiler.
- Wall mounting template.
- Wall mounting plate.
- Installation & Servicing Instructions.
- User's Instructions.
- Hardware pack.
- Controls pod door.
- Cover plate.

HARDWARE PACK CONTENTS
- No. 14 x 50 mm wood screws, 3 off.
- No. 10x 50 mm wood screws, 3 off.
- Wall plug (TP2B - brown), 6 off.
- Data plate indication arrow, 1 off.
- Back panel to wall sealing strip, 3 off.

1A UNPACKING - continued

1. Unpack the boiler.
2. Remove the casing as follows & place to one side to avoid damage.
   (a) Release the controls pod fixing screws (a) 3 full turns only. Remove the pod by pulling it forward to disengage from the keyhole slots.
   (b) Undo the 3 screws (b) retaining the casing to the back panel.
   (c) Remove the casing in the direction of the arrows.

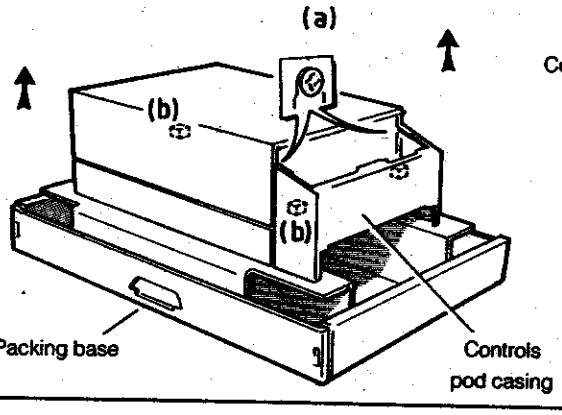

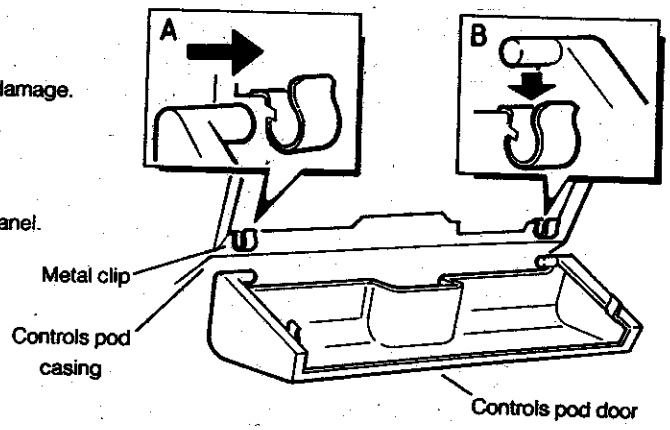

3. Fit the plastic controls pod door to the controls casing as follows:
   A. Insert the L.H. door catch into the L.H. metal clip fitted to the controls pod casing.
   B. Push the R.H.door catch into the R.H. metal clip.
4. Unpack the flue terminal.
5. Remove the boiler from its packing base. **Do not remove the controls protection box.**

FLUE PACKS **Note.** All Flue Packs contain 2 sachets of sealant.

PACK B. Contains a balanced flue terminal suitable for wall thicknesses from 229 mm (9 in.) to 305 mm (12 in.).

PACK B1. Contains a balanced flue terminal suitable for wall thicknesses from 318 mm (12 1/2 in.) to 394 mm (15 1/2 in).

PACK C. Contains a balanced flue terminal suitable for wall thicknesses from 114 mm (4 1/2 in.) to 191 mm (7 1/2 in.).

PACK D. Contains extension ducts which, when used in conjunction with PACK B, are suitable for wall thicknesses from 406 mm (16 in.) to 584 mm (23 in.). **Note.** Wall thicknesses outside those specified cannot be accommodated. An overlap of at least 50 mm at any duct joints must be allowed.

2 BOILER ASSEMBLY
Exploded view

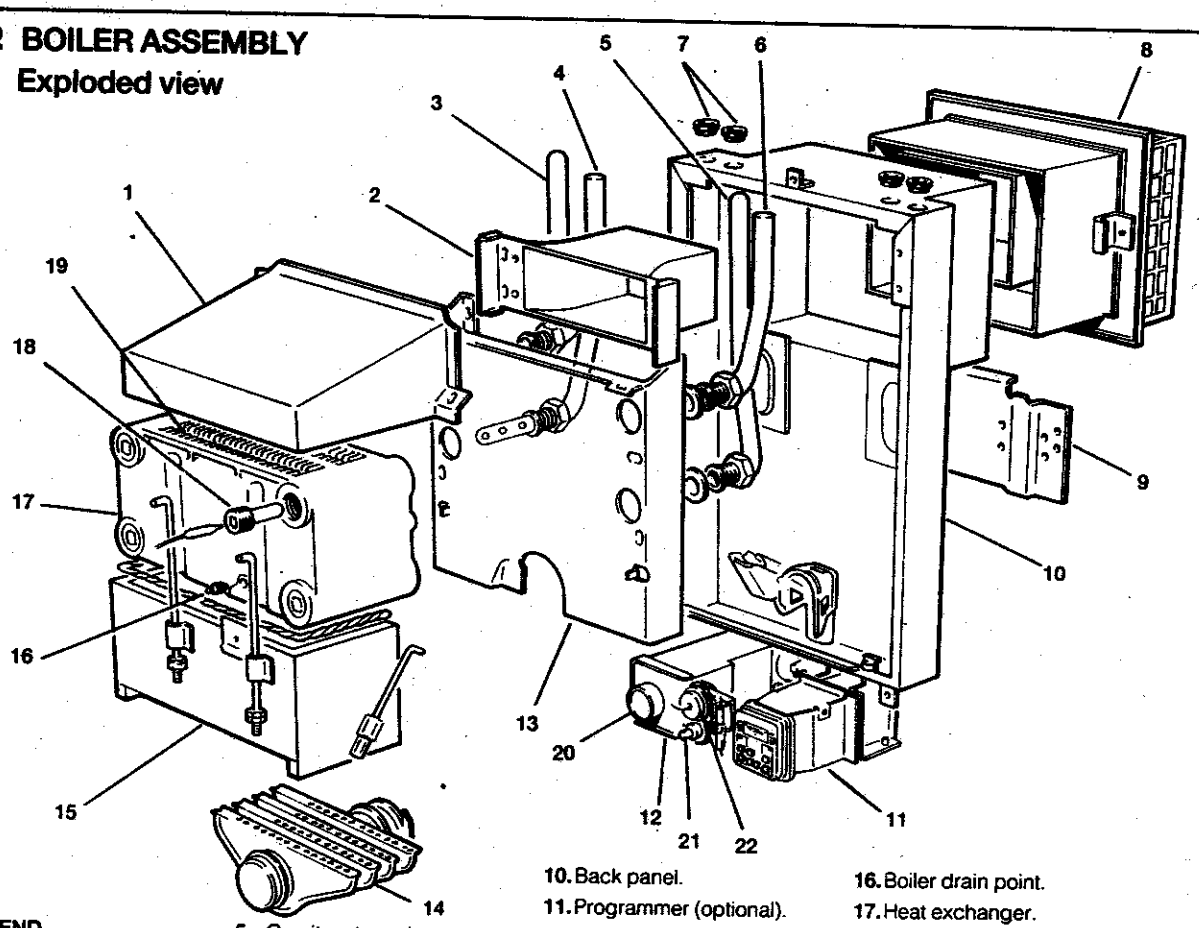

LEGEND

1. Collecter hood.
2. Boiler flue duct.
3. Gravity flow pipe.
4. Pumped return pipe.
5. Gravity return pipe.
6. Pumped flow pipe.
7. Rubber sealing grommets.
8. Balanced flue terminal.
9. Wall mounting plate.
10. Back panel.
11. Programmer (optional).
12. Control box (mounted on the gas control valve).
13. Interpanel.
14. Main burner.
15. Combustion chamber
16. Boiler drain point.
17. Heat exchanger.
18. Thermostat pocket.
19. Flue Baffles (RS 50 P only).
20. Boiler thermostat.
21. Igniter button.
22. Overheat thermostat (if fitted).

3 BOILER WATER CONNECTIONS. Open vented systems.

1. This appliance is NOT suitable for use in a direct hot water system.
2. If the boiler is to be used on a sealed system, an **Overheat Thermostat Kit** is available and must be installed in accordance with the instructions supplied with the kit.
3. If the boiler is to be used for gravity domestic hot water supply then cut off the spun ends of the gravity flow and return pipes and fit a 22 mm to 28 mm copper connection at the boiler gravity flow and return connections in order to run the gravity circuits in 28 mm pipe.

*For Sealed System applications (fully pumped) refer to the **Overheat Thermostat Kit** instructions*

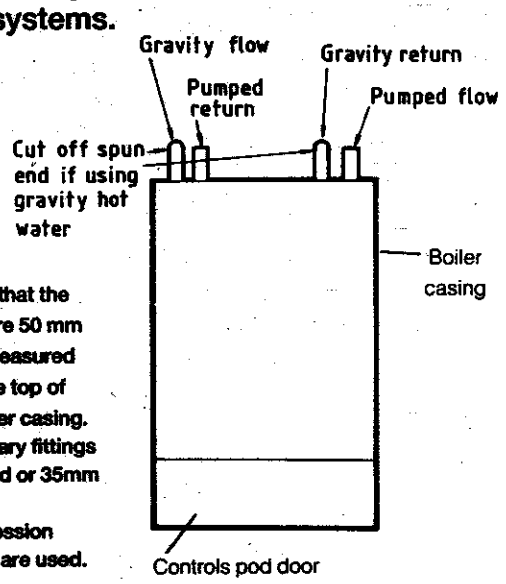

Ensure that the pipes are 50 mm long -measured from the top of the boiler casing. If capillary fittings are used or 35mm long if compression fittings are used.

4 OPEN VENT SYSTEM REQUIREMENTS. Fully pumped.

All dimensions in mm. (in.)

The system should be vented directly off the boiler flow pipe, as close to the boiler as possible. The cold feed entry should be iinverted and MUST be positioned between the pump and the vent, and not more than 150 mm (6 in.) away from the vent connection.

Note. Alternatively the redundant gravity flow and return connections may be used for feed and vent if a close coupled feed and vent system is not desired.

There should be a minimum height - 450 mm (18 in.) of open vent above cistern water level. If this is impossible refer below.

The vertical distance between the highest point of the system and the feed/expansion cistern water level MUST not be less than 450 mm (18in.) The pump MUST be fitted on the flow side of the boiler.

A suitable pump is a domestic circulator capable of providing an 11° C (20°F) temperature differential (e.g. Grunfos UPS 15/50 or equivalent).The vertical distance between the pump and feed/expansion cistern MUST comply with the pump manufacturers minimum requirements to avoid cavitation. Should these conditions not apply, either lower the pump position or raise the cistern above the minimum requirement specified by Caradon Heating Ltd. **Note:** A cold water feed path must be available back to the boiler, when all automatic valves are in the closed position (Refer BS. 6798) and when close coupled the feed must not be in a vertical leg.

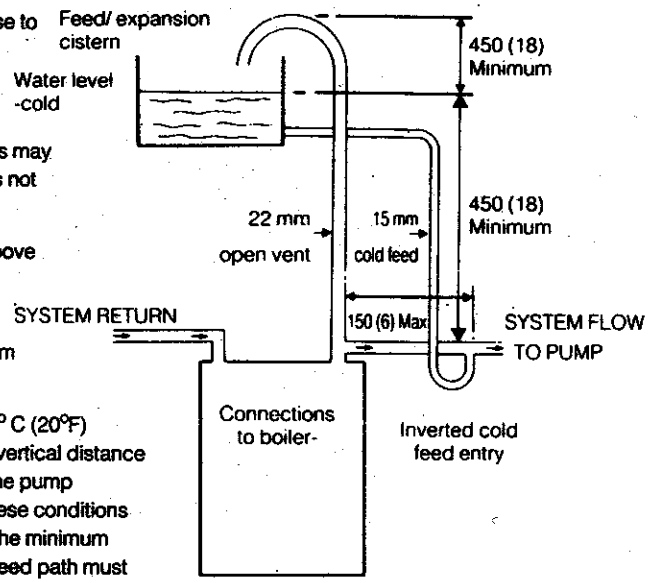

LOW HEAD INSTALLATIONS

The **Ideal Classic** range of boilers can be installed in low head situations by fitting a 'surge arrester' in the expansion pipe - as shown.

The following conditions MUST be observed;

1. The surge arrester must be at least 42 mm in diameter x 150 mm long, thus ensuring a MINIMUM air gap and a MINIMUM depth of water below the static water level (cold) of 75 mm.
2. The static water level (cold) must be at least 200 mm above the top of the horizontal flow pipe, fitted as shown. The vent connection MUST NOT be made immediately off the top of the boiler, as venting is made less efficient.
3. The maximum practical length of 15 mm cold feed pipe should be used in order to reduce the effective volume of system water expanding into the feed / expansion cistern to a minimum.

MINIMUM REQUIREMENTS

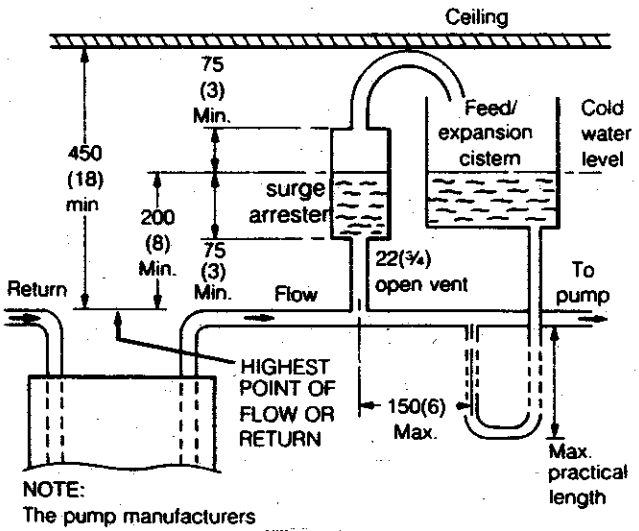

NOTE:
The pump manufacturers minimum requirements must be complied with.

All dimensions in mm (in)
N.B. Imperial dimensions approximate

5 REQUIREMENTS FOR CORRECT GRAVITY HOT WATER PERFORMANCE

NOTE: Gravity horizontal pipes should be ABOVE ceiling level and as SHORT as possible. A MINIMUM inclination of 25 mm per 3 m run (1 in per 10 ft) is required to avoid air locks. If these conditions cannot be met, pumped primaries MUST be used.

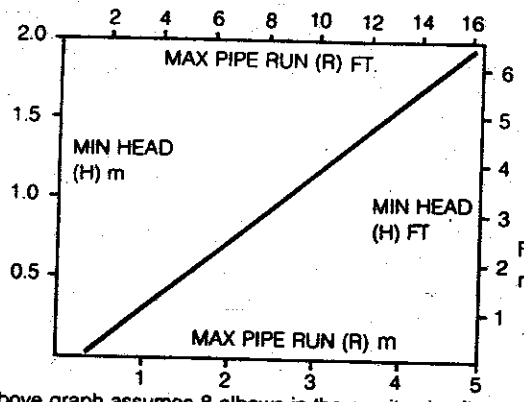

The above graph assumes 8 elbows in the gravity circuit. For each elbow in excess of 8 (R) must be reduced by 300 mm (12 in) or (H) increased by 100 mm (4 in).

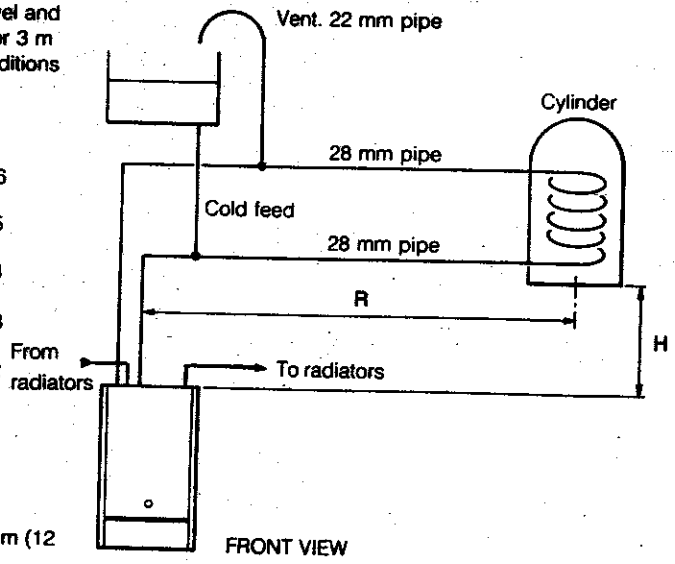

6 BOILER DIMENSIONS / SERVICES

All dimensions in mm (in.)

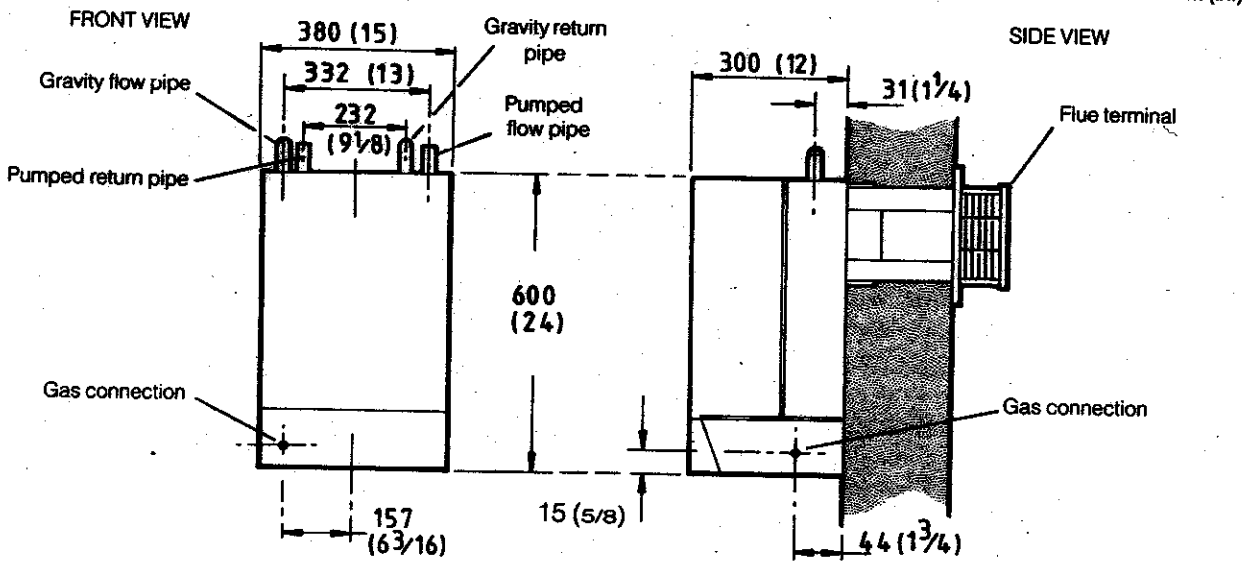

7 CLEARANCES & TERMINAL OPENING

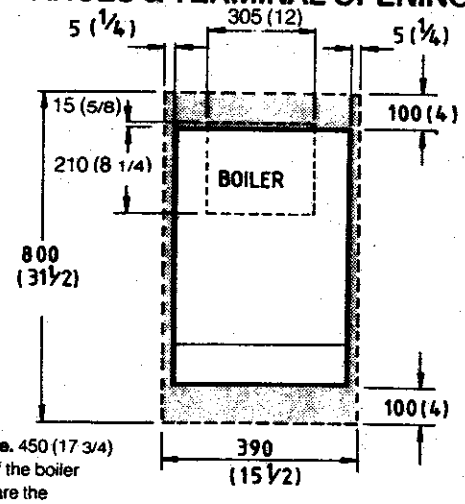

Front Clearance. 450 (17 3/4) from the front of the boiler casing. These are the minimum clearances needed to allow access to service the boiler, but additional space may be needed for installation, depending on site conditions. **Note.** If using the Sealed System Module, refer to the instructions packed with the module for the necessary clearances.

8 WALL MOUNTING TEMPLATE

1. Tape the template to the wall in the selected position. Ensure squareness by use of a plumbline - as shown.
2. Mark out the position of the 3 wallplate screws, choosing 1 from each group of 3 holes. Also the position of the hole for the duct, the jacking plate screw and the top cover plate screws.
3. Drill the three holes, 8 mm (5/16 in.), & insert the 3 plastic plugs. Also drill the jacking plate screw and the top cover plate screw holes and insert the plastic plugs.

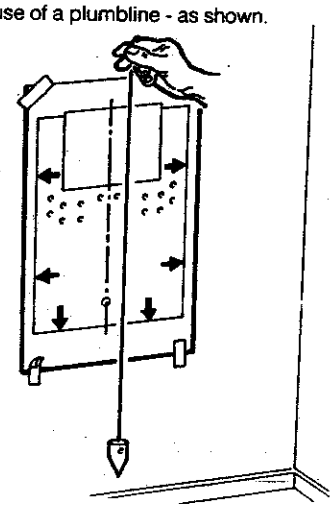

4. Remove the template from the wall.

9 PREPARING THE WALL

NOTE. THE WALL MUST BE OF SUITABLE LOAD BEARING CAPACITY.

1. Cut the appropriate hole in the wall for insertion of the terminal assembly. ***Note.*** The terminal must not come into contact with a combustible material, such as that used in the non-standard construction of timber framework and plasterboard etc.

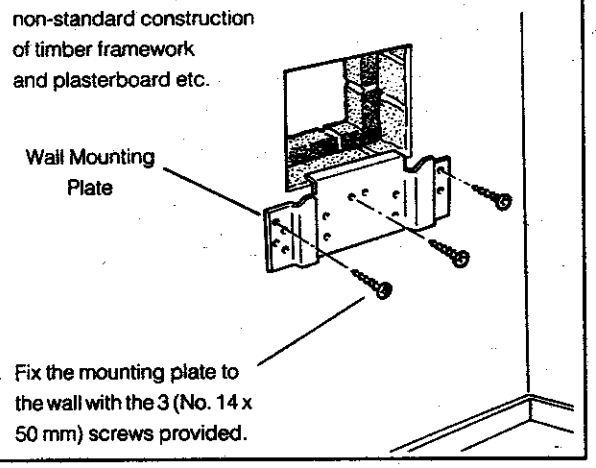

2. Fix the mounting plate to the wall with the 3 (No. 14 x 50 mm) screws provided.

10 PREPARING THE BOILER

1. Carefully place the boiler on its side and stick the self adhesive sealing tape to the boiler back panel as shown.

REAR VIEW OF BOILER

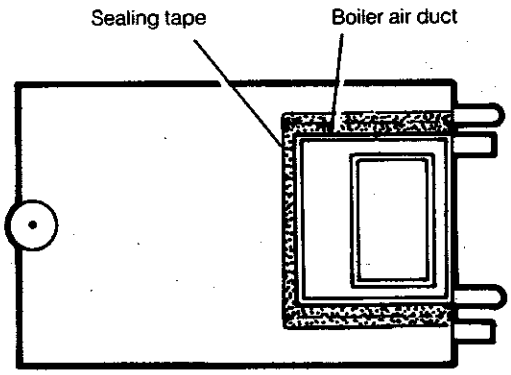

Note. *Do not remove the controls protection box until the boiler has been lifted onto the wall mounting plate.*

11 MOUNTING THE BOILER

1. Lift the boiler onto the wall mounting plate, entering the projecting flue duct into the opening cut in the wall, and lowering the two slots in the boiler back panel onto the angled tabs on the top of the wall mounting plate.

   DO NOT USE THE BURNER ASSEMBLY FOR LIFTING.

2. Remove the controls protection box.

FLUE ALIGNMENT

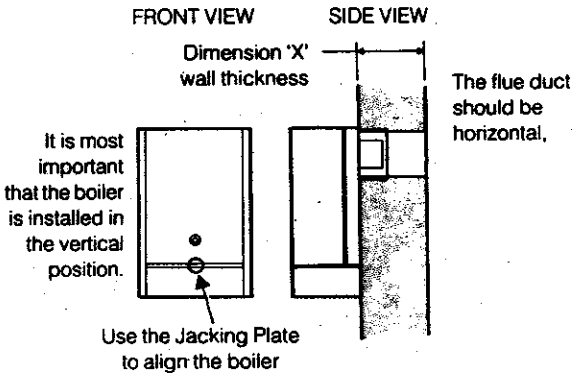

The wall must be of suitable load -bearing capacity.

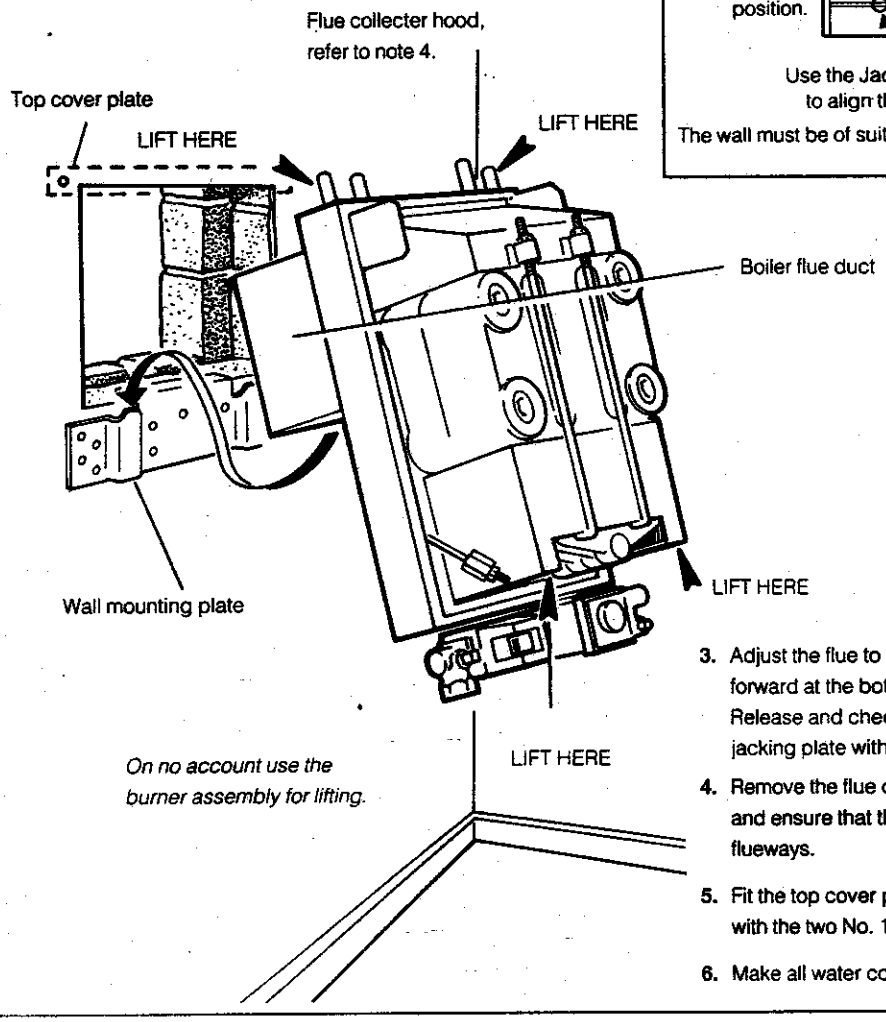

On no account use the burner assembly for lifting.

3. Adjust the flue to its horizontal position by tilting the boiler forward at the bottom and then turning the jacking plate. Release and check alignment with a spirit level. Secure the jacking plate with a No. 10 x 50 mm long wood screw.
4. Remove the flue collector hood (refer Frame 5 'Servicing') and ensure that the flue baffles are fully inserted in the flueways.
5. Fit the top cover plate in position above the boiler air duct with the two No. 10 x 50 mm. long wood screws provided.
6. Make all water connections.

12 FITTING THE FLUE ASSEMBLY. Duct lengths up to 400 mm (16 in.)

FLUE TERMINAL ASSEMBLY

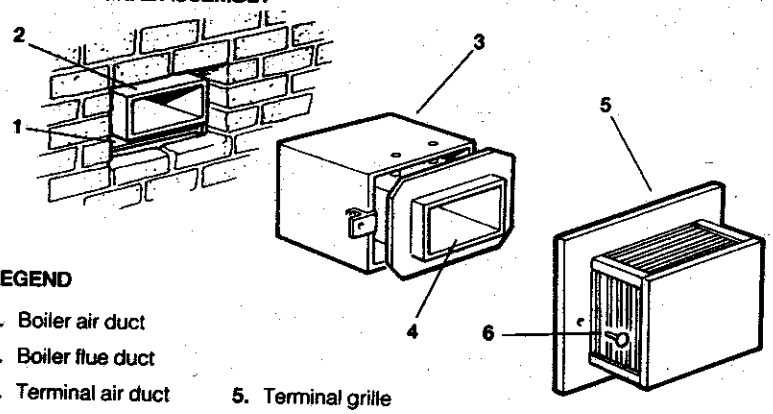

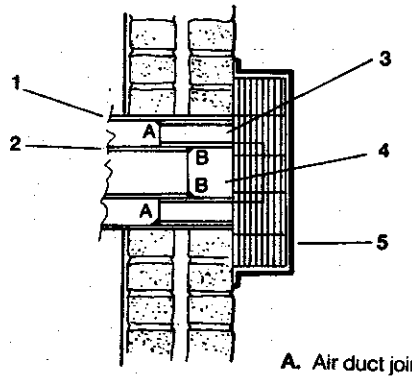

LEGEND

1. Boiler air duct
2. Boiler flue duct
3. Terminal air duct
4. Terminal flue duct
5. Terminal grille
6. Terminal grille securing screws

A. Air duct join
B. Flue duct join

FLUE TERMINAL SHOWN IN POSITION

Note. For duct lengths greater than 400 mm (16 in.), refer to Frame 13.

1. Remove the two securing screws and separate the terminal grille from the terminal assembly.
2. Remove the four securing screws and separate the terminal flue duct from the terminal air duct.
3. Smear sealant around outer perimeter of terminal air duct at the opposite end to the brackets and on the mating face of the boiler air duct (use one sachet of sealent).
4. Push the terminal air duct fully in- until the fixing brackets contact the wall face.
5. Make good between the wall and duct, from OUTSIDE of the building.
6. From OUTSIDE of the building, pass the terminal flue duct through the wall opening and slide it over the boiler flue duct. Locate it as shown and fix it in position with the four screws previously removed.
7. Seal the flue duct join (B) with the remaining sachet of sealent provided, either from inside the building (through the flue duct) or from outside of the building.
8. Fasten the terminal grille to the duct assembly.
9. Replace the collector hood.

13 EXTENSION DUCTS. Duct lengths greater than 400 mm (16 in.)

EXTENSION DUCTS SHOWN FITTED

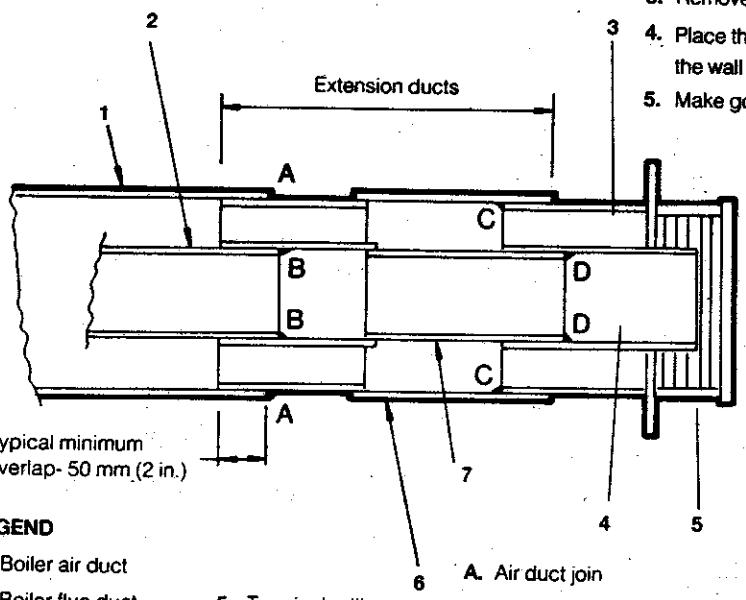

LEGEND

1. Boiler air duct
2. Boiler flue duct
3. Terminal air duct
4. Terminal flue duct
5. Terminal grille
6. Extension air duct
7. Extension flue duct

A. Air duct join
B. Flue duct join
C. Terminal air duct join
D. Terminal flue duct join

1. BEFORE PLACING THE BOILER IN POSITION, loosely fit the extension air duct and terminal assembly to the boiler air duct and adjust to the required overall duct length. **Note.** Ensure that any of the duct overlaps are not less than 50 mm (2 in.)-
2. Secure the extension air duct in position, using the adhesive tape provided, at join A. Ensure that a good seal is made.
3. Remove the terminal assembly.
4. Place the boiler in position - entering the extension duct into the wall opening.
5. Make good the brickwork around the wall opening.
6. Separate the terminal grille, terminal air duct and terminal flue duct. Refer to Frame 12.
7. From OUTSIDE of the building, pass the terminal air duct through the wall opening and slide it into the extension air duct, locating it as shown.
8. Smear sealent around outer perimeter of terminal air duct at the opposite end to the brackets and on the mating face of the boiler air duct (use one sachet of sealent).
9. Push the duct fully in until the fixing brackets contact the wall face.
10. Ensure that the duct is level and make good between the wall and the duct from OUTSIDE of the building.
11. From OUTSIDE of the building, slide the extension flue duct over the boiler flue duct to the same distance as the extension air duct. Seal the duct join (B) with the sealent provided.
12. From OUTSIDE of the building, pass the terminal flue duct through the wall opening & slide it into the extension flue duct. Locate it as shown, and fix in position with the four screws previously removed.
13. From OUTSIDE of the building, seal the duct join D with the sealent provided.
14. Fasten the terminal grille to the duct assembly.
15. Replace the collector hood.

14 GAS CONNECTION

A MINIMUM gas pressure of 37 mbar (14.8 in.w.g.) MUST be available at the boiler inlet.

The main gas cock is on the left hand side of the gas control valve, as shown.

To facilitate connection it is recommended that the gas cock is not removed from the gas control valve.

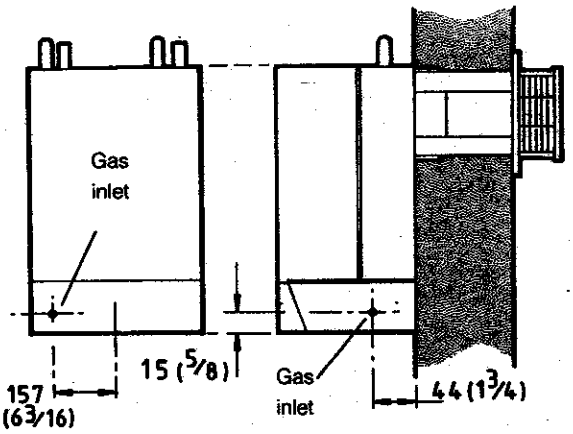

Also refer to 'Gas supply' - page 3.

15 ELECTRICAL CONNECTIONS

WARNING: The appliance MUST be efficiently earthed.

A mains supply of 240 V ~ 50 Hz is required.

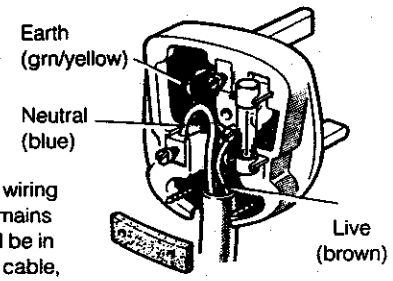

All external controls & wiring MUST be suitable for mains voltage. Wiring should be in 3-core PVC insulating cable, NOT LESS than 0.75 mm² (24 x 0.2 mm) to BS.6500 Table 16.

Wiring external to the boiler MUST be in accordance with current I.E.E. Wiring Regulations & Local Regulations.

The supply connection may be made via a removable plug to an unswitched shuttered socket/outlet, preferably adjacent to the boiler, & should such a plug be used for connection to the mains, it must be of the 3-pin type-wired as shown, fused at 3A & comply with the requirements of BS.1363. Alternatively, a fused double-pole switch, having a 3mm contact separation in both poles, serving only the boiler & its external controls may be used.

Note. If the optional Programmer Kit is to be fitted, refer to the instructions provided with the kit, ignore this Frame & go to Frame 16.

The internal wiring of the control box is shown in Frame 17. A wiring diagram is also contained in the Lighting Instructions (inside the control pod door).

DETAIL OF CONTROL BOX TERMINALS

Note: In order to connect the incoming, mains wires, first remove the control box cover, then remove the terminlal fixing screw & lift the terminal strip clear of the control box (refer to Fr.23 'Servicing'). Ensure that the earth lead is longer than the live and neutral so that if the cable slips in its anchorage the current carrying conductors become taut before the earth conductor & that the cable is routed through the strain relief clamp. Ensure all cables are secure & that no basic insulation is accessible outside of the control box. (ref. diag. in Fr. 23 'Servicing').

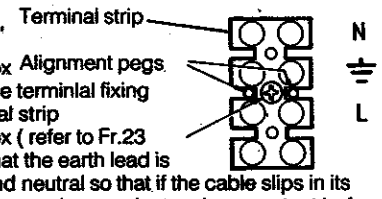

FLOW WIRING DIAGRAM

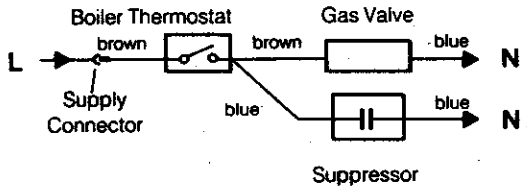

16 EXTERNAL CONTROLS

The wiring diagrams illustrated in Frames 18 - 21 cover the systems most likely to be fitted to this appliance.

For wiring external controls to the **Ideal Classic** RS boiler, reference should be made to the system wiring diagrams supplied by the relevant Manufacturer, in conjunction with the wiring diagrams shown in Frames 17 - 21.

Difficulty in wiring should not arise, providing the following directions are observed:

1. Controls that switch the system ON & OFF, e.g. a time switch, MUST be wired, in series, in the live mains lead to the boiler.
2. Controls that over-ride an ON/OFF control e.g. a frost thermostat, MUST be wired into the mains lead, in parallel, with the control(s) to be over-ridden - refer to Frame 21.
3. Controls that switch the circulation pump only ON and OFF, e.g. a room thermostat, MUST be wired, in series, with the pump in the live pump lead.
4. If a proprietary system is used, follow the instructions supplied by the Manufacturers.
5. SYSTEM DESIGNS FEATURING CONTROLS OR WIRING ARRANGEMENTS WHICH ALLOW THE BOILER TO FIRE WHEN THERE IS NO PUMPED OR GRAVITY CIRCULATION TAKING PLACE SHOULD NOT BE FITTED.

Advice on required modifications to the wiring may be obtained from the component Manufacturers.

Notes.
1. Connections between a frost thermostat and the time control should be made without disturbing other wiring.
2. A frost thermostat should be sited in a cool place in the house, but where it can sense heat from the system.

17 PICTORIAL WIRING

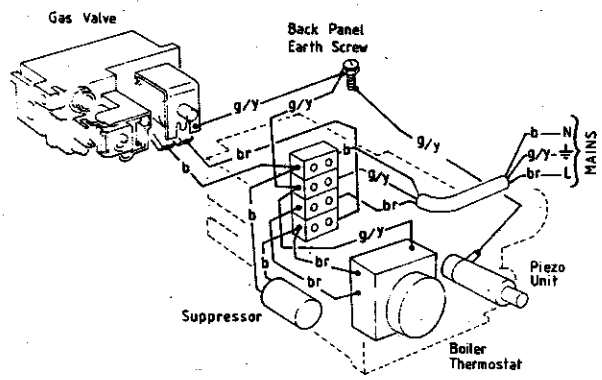

LEGEND **b** Blue
br Brown **g/y** Green/Yellow

18 MID POSITION VALVE

Pumped only

Notes:

1. Some earth wires are omitted for clarity. Ensure proper earth continuity when wiring
2. Numbering of terminals on thermostats is specific to the Manufacturer.
3. This is a fully controlled system - set the boiler thermostat to maximum.
4. Switchmaster 'Midi' is similar in operation, but the wiring differs slightly; see Manufacturer's literature.

LEGEND

b - blue	gy - grey	r - red
bk - black	g - green	y - yellow
br - brown	or - orange	w - white

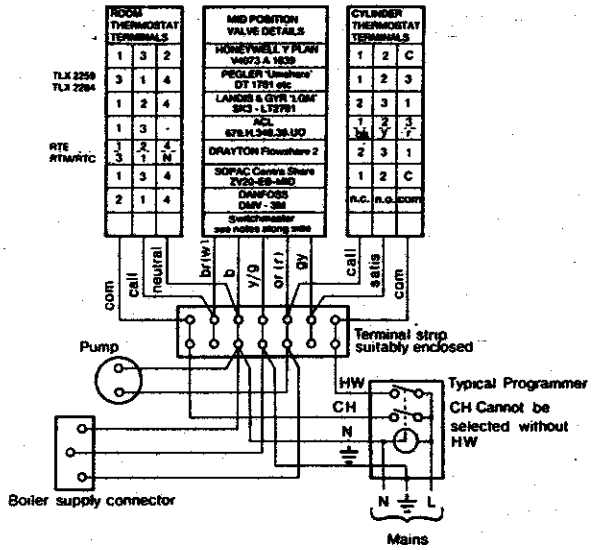

19 TWO SPRING CLOSED VALVES

Pumped only

Notes:

1. Some earth wires are omitted for clarity. Ensure proper earth continuity when wiring
2. Numbering of terminals on thermostats is specific to the Manufacturer.
3. This is a fully controlled system - set the boiler thermostat to maximum.
4. Switchmaster valve has grey & orange auxillary switch leads, but the grey wire must be connected to the live supply.

LEGEND

b - blue	gy - grey	bk - black
br - brown	or - orange	w - white
r - red		

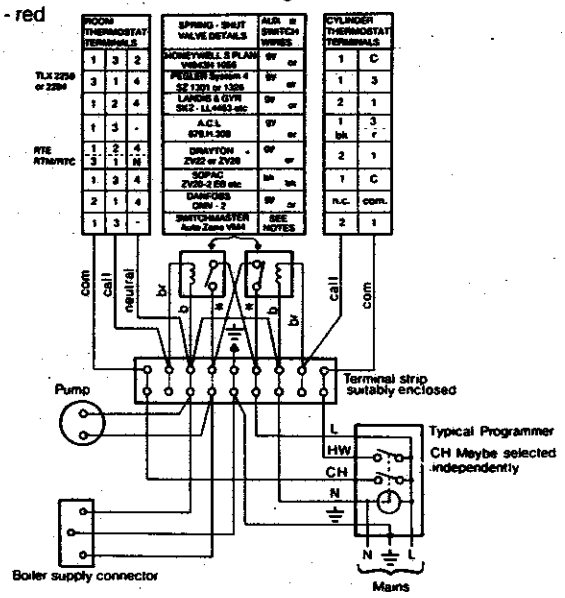

20 HONEYWELL 'C' PLAN

Gravity HW & pumped CH

Notes:

1. Some earth wires are omitted for clarity. Ensure proper earth continuity when wiring
2. Numbering of terminals on thermostats is specific to the Manufacturer.

LEGEND

w - white	bk - black	br - brown
or - orange	b - blue	gy - grey
g - green	r - red	y - yellow

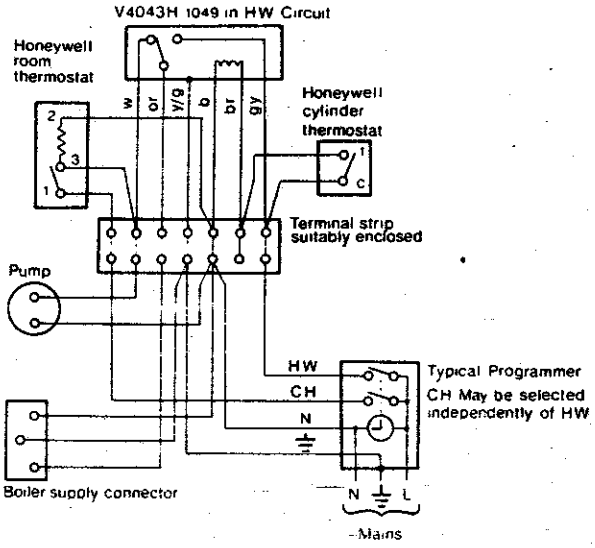

21 FROST PROTECTION

A. Double pole frost stat', e.g. SOPAC TA347.04

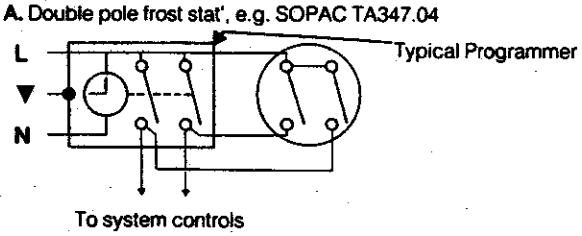

B. Change-over frost stat', (shown satisfied)

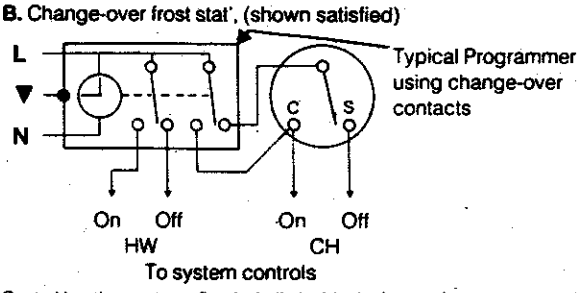

Central heating systems fitted wholly inside the house do not not normally require frost protection, as the house acts as a 'storage heater' & can normally be left at least 24 hrs. without frost damage. However, if parts of the pipework run outside the house, or if the boiler will be left off for more than a day or so, then a frost stat' should be wired into the system. This is usually done at the programmer, in which case the programme selector switches are set to 'Off' & all other controls MUST be left in the running position. The frost stat' should be sited in a cold place, but where it can sense heat from the system. Wiring should be as shown, with minimal disturbance to other wiring of the programmer. Designation of the terminals will vary, but the programmer and thermostat manufacturer's leaflets will give full details. Diagram A shows a double pole frost stat', which should suffice for all systems which do not use the 'OFF' terminals of the programmer. Diagram B shows a 'change-over' frost stat', which will cover most systems which do use 'CH OFF'. If, however, on such a system, the HW pipework is in an isolated part of the house, a second frost stat' may be used to protect it. If in doubt, ask your installer for advice.

22 COMMISSIONING & TESTING

(a) Electrical Installation

1. Checks to ensure electrical safety should be carried out by a competent person.
2. ALWAYS carry out preliminary electrical system checks, ie. earth continuity, polarity, resistance to earth and short circuit using a suitable test meter.
3. Refit the control box cover.

(b) Gas Installation

1. The whole of the gas installation, including the meter, MUST be inspected and tested for soundness, and purged in accordance with the recommendations of BS. 6891.
2. Purging air from the gas installation may be expedited by loosening the screws on the gas service cock and purging until gas is smelled.
3. Retighten the screws and check for gas soundness.

WARNING. Whilst effecting the required gas soundness test and purging air from the gas installation, open all windows and doors, extinguish naked lights and DO NOT SMOKE.

23 INITIAL LIGHTING

BOILER CONTROLS

Note. The gas service cock is shown in the OPEN position.

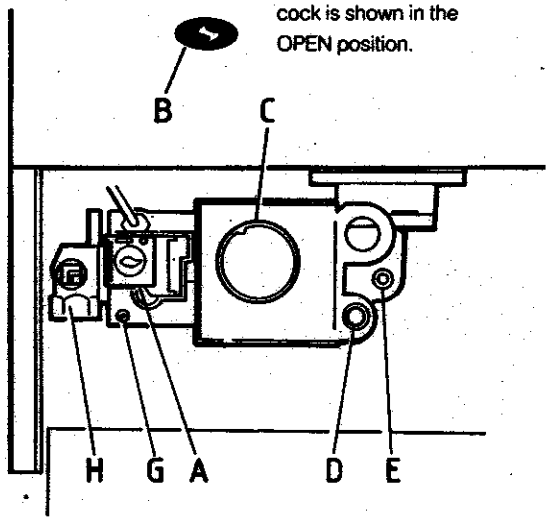

LEGEND

- **A** Gas valve control button
- **B** Sightglass
- **C** Thermostat control knob
- **D** Piezo unit ignition
- **E** Burner pressure test nipple
- **G** Inlet pressure test nipple
- **H** Gas service cock

1. Check that all drain cocks are CLOSED, and that the stop valves in the flow and return lines are OPEN and that the thermostat phial is in its pocket.
   Determine the required heat input and fix the adhesive arrow (supplied in the Hardware Pack) to the data plate on the bottom right hand side of the back panel, indicating the intended burner setting pressure heat input.
2. Check that the gas service cock (H) is ON and that the boiler thermostat control knob (C) is OFF. Fit the boiler casing (Frame 24) but do not fit the controls casing pod.
3. Loosen the screw in the burner pressure test nipple (E) and connect a gas pressure gauge via a flexible tube.
4. Slide the gas control button (A) to the RIGHT until resistance is felt and then release it. WAIT FOR THREE MINUTES.
5. Push in and retain fully depressed the gas control button (A). Press and release the piezo unit button (D) repeatedly until the pilot is seen to light through the sightglass (B).
6. Hold the gas control button depressed for 15 seconds after the pilot burner has ignited, then release.
7. If the pilot burner fails to remain alight at this stage, repeat the procedure detailed above but wait longer than 15 seconds before releasing the gas control button.
8. Check the appearance of the pilot flame to ensure that it envelopes the tip of the thermocouple and is approximately 25mm (1in) long. Check that the thermocouple output is between 8 and 15 mV closed circuit.
   The pilot flame is factory set and no adjustment is possible. If the pilot flame is incorrect refer to Frame 7 of the 'Servicing' instructions.
9. Check that the electricity supply and all external controls are ON.
10. Set the boiler thermostat control knob to position '6' and check that the burner cross lights smoothly from the pilot flame.
11. Test for gas soundness around the boiler gas component joints, using leak detection fluid.
12. Operate the boiler for ten minutes to stabilise the burner temperature.
13. Check the burner setting pressure against the relevant values quoted in Table 2, Page 2.
14. Set the boiler thermostat control knob to OFF. Remove the pressure gauge tube, and tighten the sealing screw in the pressure test nipple. Relight and check for gas soundness at the pressure test nipple.
15. Refit the controls casing pod & tighten the two front fixing screws.
16. Close the pod door.

24 FITTING THE CASING

1. Check that the sealing strip is in place along the four rear edges of the boiler casing.

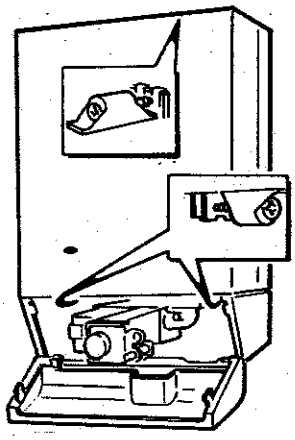

2. Lift the boiler casing up to the boiler assembly, locate over the upper support bracket and secure with the 3 captive screws.
3. The casing must be sealed correctly. This MUST be checked by ensuring that, at the top and bottom edges of the casing, the seal is compressed over its complete length.

25 GENERAL CHECKS

Make the following checks for correct operation:

1. Turn the boiler thermostat OFF and ON, and check that the main burner is extinguished and relit in response.
2. **Flame failure device**

   Check the operation of the flame failure device in the gas control valve as follows:

   (a) Extinguish the pilot flames by closing the gas service cock (H) and note the time taken for the flame failure device to shut down - identified by a click within the gas control valve. This MUST NOT be longer than 50 seconds.

   (b) Open the gas service cock and re-light the pilot.
3. With the burner alight again, slide the gas control button to the right until resistance is felt and then release it. The burner and pilot flames should shut down immediately.

   Note.A latch in the gas control provides a safety delay period before the boiler can be re-lit.
4. The correct operation of ANY programmer and all other system controls should be proved. Operate each control separately and check that the main burner or circulating pump, as the case may be, responds.
5. With the system HOT, examine all water connections for soundness. Then turn OFF the gas, electricity and water supples to the appliance and drain down whilst the system is stil hot, in order to complete the flushing process. Refill and vent the system and again check for water soundness.
6. Finally set the controls to the User's requirements.

   The temperatures quoted below are approximate and vary between installations.

Knob Setting	Flow Temperature °C	Flow Temperature °F
1	56	133
2	61	142
3	66	152
4	72	161
5	77	170
6	82	180

WARNING. The boiler MUST NOT be operated with the casing removed.

26 HANDING OVER

After completing the installation and commissioning of the system, then the installer should hand over to the householder by the following actions:

1. Hand the User's Instructions to the Householder and explain his or her responsibilities under the Gas Safety (Installation and Use) Regulations 1984.
2. Draw attention to the Lighting Instruction label affixed to the controls pod door.
3. Explain and demonstrate the lighting and shutting down procedures.
4. The operation of the boiler and the use and adjustment of ALL system controls should be fully explained to the Householder, to ensure the greatest possible fuel economy, consistant with household requirements of both heating and hot water consumption.

   Advise the User of the precautions necessary to prevent damage to the system and to the building, in the event of the system remaining inoperative during frosty conditions.
5. Explain the function and the use of the boiler thermostat and external controls.
6. Explain the function of the boiler over-heat thermostat (ONLY FITTED FOR SEALED SYSTEM USE) and emphasise that if cut-out persists, the boiler should be turned off and the local Heating Installer consulted.
7. Explain and demonstrate the function of time and temperature controls, radiator valves, etc for the economic use of the system.
8. If any Programmer Kit is fitted, then draw attention to the Programmer Kit User's instructions and hand them to the Householder.
9. Stress the importance of regular servicing by the Local Gas Region or by a qualified Heating Engineer and that a comprehensive service should be carried out AT LEAST ONCE A YEAR.

1 SCHEDULE

To ensure the continued safe and efficient operation of the appliance, it is recommended that it is checked at regular intervals and serviced as necessary. The frequency of servicing will depend upon the installation condition and usage, but should be carried out at least annually.

It is the law that any service work must be carried out by a competent person.

(a) Light the boiler and carry out a pre-service check, noting any operational faults.

(b) Clean the main burner.

(c) Clean the heat exchanger.

(d) Clean the main and pilot injectors.

(e) Check that the flue terminal is unobstructed and that the flue system, including the inner cover, is sealed correctly.

(f) if the appliance has been installed in a compartment, check that the ventilation areas are clear.

The servicing procedures are covered more fully in Frames 2 to 7 and must be carried out in sequence.

WARNING. Disconnect the electrical supply.

IMPORTANT. After completing the servicing or exchange of components always test for gas soundness and carry out functional checks as appropriate.

Note. In order to carry out either servicing or replacement of components, the boiler casing must be removed (Frame 2).

IMPORTANT. When work is complete the casing MUST be correctly refitted, ensuring that a good seal is made.

The boiler must NOT be operated if the casing is not fitted.

2 BOILER CASING REMOVAL

1. Refer to Frame 1.
2. If the Ideal Classic sealed system module is fitted lift off the casing to expose the boiler casing top fixing screw.
3. Open the controls pod door.
4. Release the three captive screws at the top and bottom of the casing. Lift the casing off the boiler and retain in a safe place.

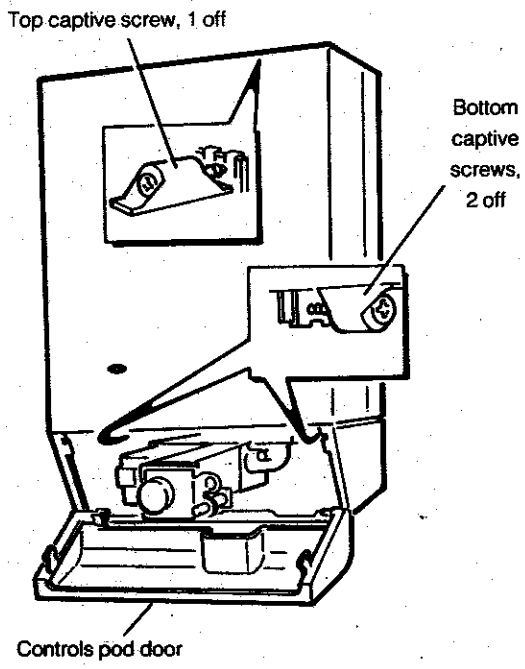

5. Isolate the gas supply at the service cock. Refer to Frame 8.

3 BURNER AND AIR BOX REMOVAL

1. Remove the screw retaining the front burner support bracket to the combustion chamber.
2. Remove the M5 pozi screw situated at the left hand, bottom rear of the burner and pull the burner downwards in order to disengage the retention tab. Remove burner to a safe place for inspection and cleaning.
3. Unscrew the thermocouple connection at the gas control.

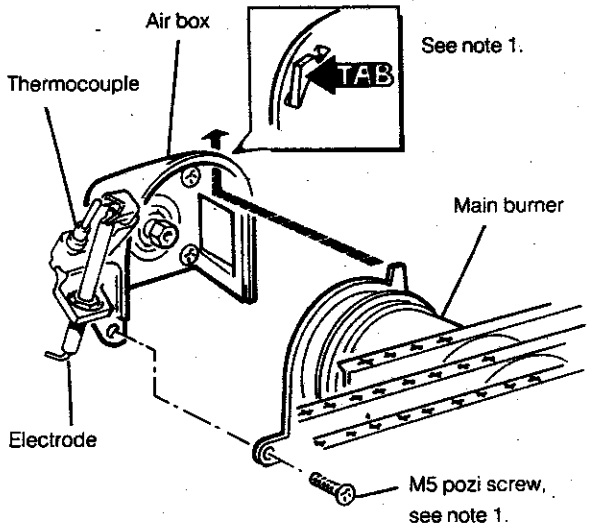

4. Remove the four screws retaining the air box / pilot assembly to the vertical manifold.
5. Pull off the electrode lead at the piezo unit.
6. Unhook the clip retaining the thermocouple and H.T. lead. Remove the air box assembly to a safe place for inspection and cleaning.

4 CLEANING THE FLUEWAYS

1. Remove the collector hood by undoing the front tie rod double nuts and washers. Withdraw the rods.

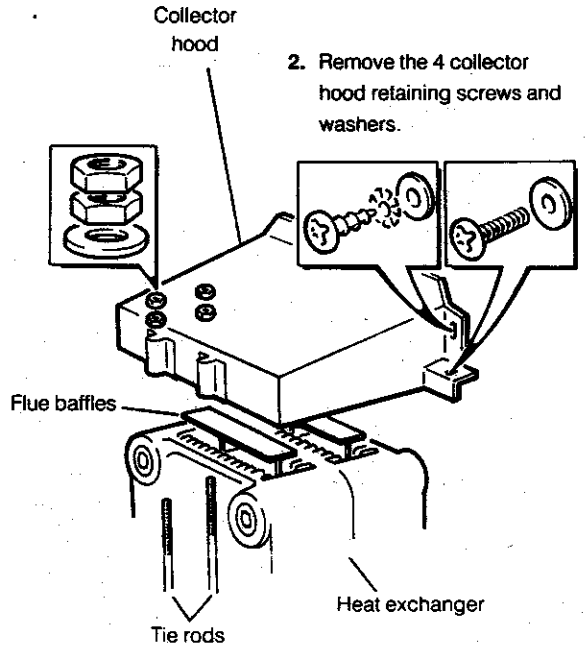

3. Unclip and remove the flue baffles from the heat exchanger.
4. Remove all loose deposits from the heat exchanger, particularly between the fins, using a suitable brush or rod.

5 CLEANING THE BURNER & PILOT ASSEMBLY

Refer to Frame 3 for illustration of the procedure below.

1. Brush off any deposits that may have fallen onto the burner head, ensuring the flame ports are un-obstructed and remove any debris that may have collected.
   Note. Brushes with metallic bristles MUST NOT be used.
   Remove the M5 nut & washer securing the burner end cap. Remove the end cap & turning baffle. Inspect the burner internal gauze and clean as necessary. Refit the turning baffle, end cap & secure with the M5 nut & washer.
2. Remove the main burner injector and ensure that there is no blockage or damage.
3. Refit injector using an approved jointing compound sparingly.
4. Inspect the pilot burner, thermocouple and spark electrode; ensure they are clear and in good condition. Check that:
   (a) The pilot burner injector is not blocked or damaged (refer Frame 11 for removal details).
   (b) The pilot burner is clean and unobstructed.
   (c) The spark electrode is clean and undamaged.
   (d) The spark lead is in good condition & securely connected.
   (e) The spark gap is correct. Refer Frame 7.
   (f) The thermocouple tip is not burned or cracked.
   (g) The position of the thermocouple relative to the pilot burner and main burner is correct. Refer to Frame 7.
   (h) The thermocouple terminal at the gas valve is clean.
5. Re-assemble the burner air box assembly in reverse order. Ensure that the burner tab is correctly located, refer to Frame 3.

Note. The pilot shield is positioned around the pilot assembly bracket and is located by the electrode retaining nut.

6 RE-ASSEMBLY

Re-assemble in reverse order to that shown in Frames 2 to 5.

1. Refit the flue baffles and retain with the spring clips.
2. Refit the collector hood, replacing any damaed or deteriorating gaskets. **Note:** Ensure rear *vertical* hood retaining screws are tightened before rear horizontal screws.
3. Refit the burner and air box assembly.
4. Turn on the gas supply.
5. Ensure the sightglass in the boiler casing is clean and undamaged.
6. Refit the boiler casing and tighten the three captive screws.
7. Inspect the visible casing seal for correct fit.
8. Refit control casing pod (see Frame 1 Inst.-note 2a)
9. Close the controls pod door.

7 PILOT BURNER SETTING

1. Turn on the gas supply.
2. Light the pilot (refer to Frame 23 'Installation') and check that the pilot flame envelopes the tip of the thermocouple and is approximately 25 mm (1 in.) long.
   The pilot is factory set to maximum and no further adjustment should be necessary. However, if the pilot flame appears small, check the pilot injector. Refer to Frame 11.

Heat Input / Setting Pressure

After each occasion of servicing reference should be made to Table 2, which quotes details of the rated output, with the related burner setting pressure and the heat input. Any required adjustment should be made by using the pressure adjustment screw. Refer to Frame 23 'Installation'.

DETAIL OF PILOT BURNER FLAME LENGTH

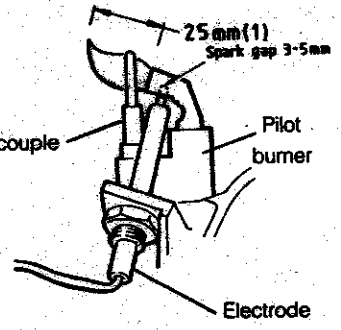

REPLACEMENT OF PARTS

8 GENERAL

When replacing any component:

(a) Isolate the electricity supply.

(b) Turn off the gas supply at the boiler, refer to the illustration below. **Note.** The gas cock is shown in the CLOSED position.

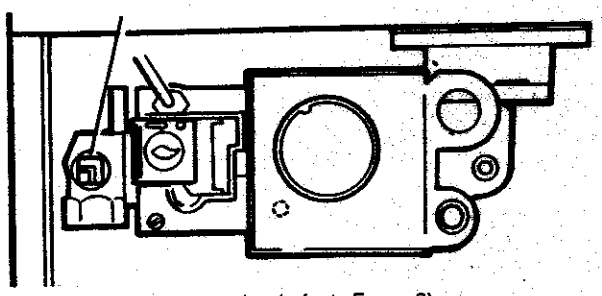

(c) Remove the boiler casing (refer to Frame 2).

IMPORTANT. When work is complete the casing MUST be correctly refitted - ensuring that a good seal is made.

The boiler MUST NOT be operated if the casing is not fitted.

9 SIGHTGLASS REPLACEMENT

1. Refer to Frame 8.
2. Unfasten the two nuts and washers holding the sightglass assembly to the casing front panel.

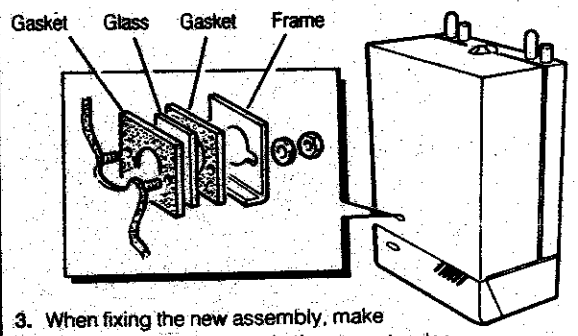

3. When fixing the new assembly, make certain that the parts are in the correct order. The frame MUST have the return edge at the bottom.
4. Retighten the two nuts to ensure an airtight seal. Do NOT overtighten.
5. Replace the boiler casing - refer to Frame 6.

10 PIEZO UNIT REPLACEMENT

1. Refer to Frame 8.
2. Disconnect the ignition and earth leads from the Piezo unit.

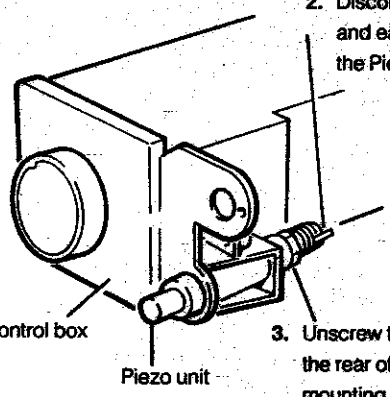

3. Unscrew the locking nut at the rear of the piezo unit mounting bracket.
4. Remove the control box cover.
5. Remove the piezo unit.
   Re-fit the new unit and re-assemble in reverse order.
6. Replace the boiler casing - Frame 6.
7. Check the operation of the new piezo unit.

11 PILOT BURNER REPLACEMENT

1. Refer to Frame 8.
2. Remove burner and air box assembly. Refer to Frame 3.
3. Remove the electrode retaining nut.
   Remove the pilot shield and electrode.

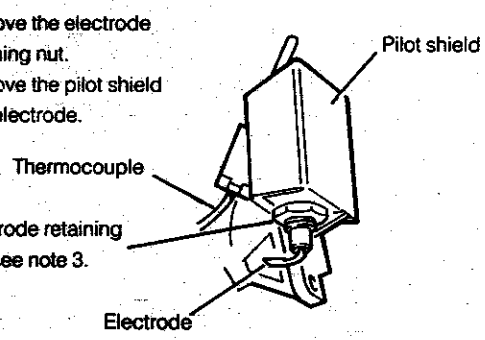

4. Unscrew the central pilot fixing screw and lift the pilot clear of thermocouple and pilot injector.

   If required, the pilot injector may now be unscrewed & the injector checked or replaced as necessary.

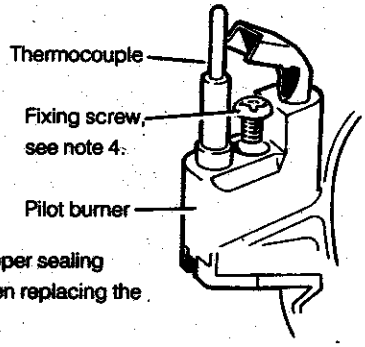

   Ensure that the copper sealing washer is fitted when replacing the injector.
5. Replace the pilot burner and retain with the M4 screw previously removed.
6. Replace the electrode and pilot shield - retaining both with the electrode nut.
7. Replace the air box assembly and ensure that the gasket is in postion.
8. Replace the burner.
9. Check the pilot burner relationship to the main burner and spark gap. Refer to Frame 7.
10. Replace the boiler casing. Refer to Frame 6.
11. Check the pilot length. Refer to Frame 7.
12. Check the pilot operation (cross lighting, holding in time, etc.).

12 SUPPRESSOR REPLACEMENT

1. Refer to Frame 8.
2. Remove the screw retaining the control box cover and remove the cover, c/w with thermostat.

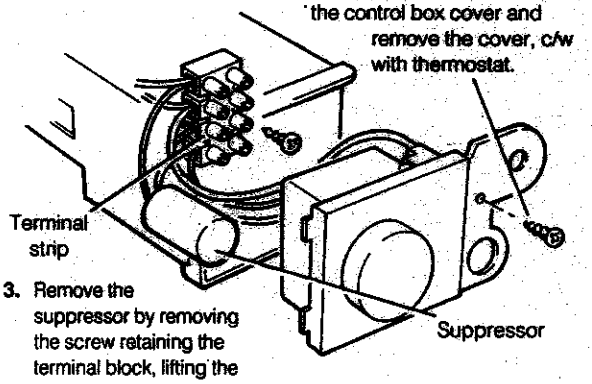

3. Remove the suppressor by removing the screw retaining the terminal block, lifting the terminal block and unscrewing the suppressor lead connections.
4. Fit the new suppressor and re-assemble in reverse order. Ensure that all of the electrical connections are correctly re-made - refer to 'Wiring Diagrams'.
5. Replace the boiler casing. Refer to Frame 6.
6. Check the operation of the control thermostat.

13 CONTROL THERMOSTAT REPLACEMENT

1. Refer to Frame 8.
2. Unclip the thermostat capillary from the two clips situated on the back panel.

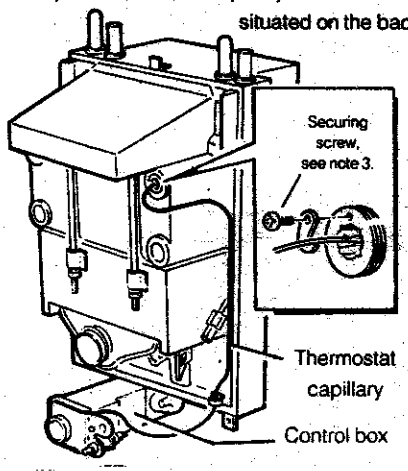

3. Slacken the screw at the thermostat pocket and pull the phial from the pocket.
4. Pull off the thermostat knob. Remove the control box cover retaining screw and remove the cover complete with thermostat.
5. Remove the two screws securing the thermostat.

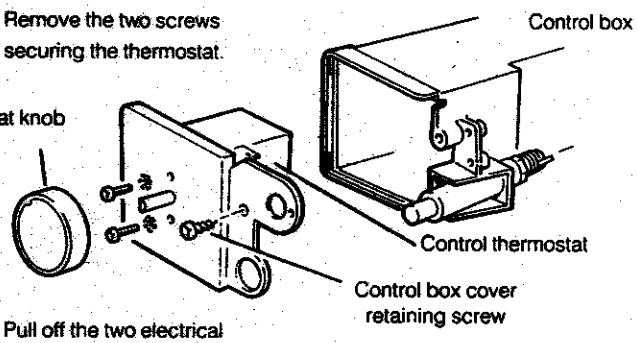

6. Pull off the two electrical connections from the thermostat head and the thermostat earth lead.
7. Fit the new thermostat and re-fit in reverse order. Ensure that the phial is correctly replaced in the pocket and the capillary routed as previously.
8. Replace the boiler casing. Refer to frame 6.
9. Check the operation of the new thermostat. Refer to Frame 25 'Installation'.

14 OVERHEAT THERMOSTAT REPLACEMENT Fitted for sealed systems only

1. Refer to Frame 8.
2. Slacken the screw at the thermostat pocket and withdraw the phial from pocket.
3. Unclip the capillary from back panel.
4. In order to gain access to the back-nut retaining the overheat thermostat; remove the control box cover by undoing the cover retaining screw (refer to Frame 12). Remove the back-nut.
5. Remove thermostat from control box and pull off the two yellow leads.
6. Re-assemble the new thermostat in reverse order (polarity immaterial), ensuring that the alignment peg on the thermostat sits in the small hole adjacent to the main fixing hole.
7. Replace the control box cover.
8. Replace the boiler casing. Refer to Frame 6.

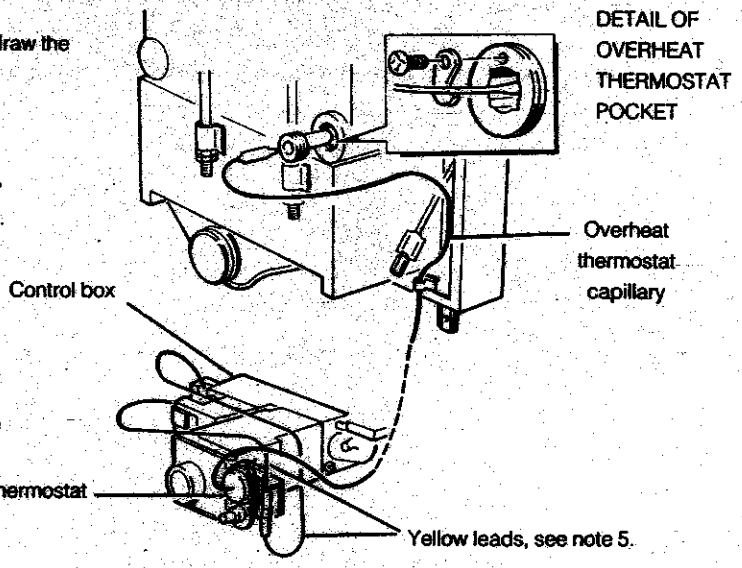

15 SPARK ELECTRODE AND LEAD REPLACEMENT

1. Refer to Frame 8.
2. Remove burner and air box assembly. Refer Frame 3.
3. Remove the electrode retaining nut.
4. Remove the pilot shield.
5. Remove the spark electrode and integral lead.
6. Fit the new electrode & lead in reverse order, taking care to replace the pilot shield.
7. Check the spark gap. Refer to Frame 7.
8. Refit the burner.
9. Replace the boiler casing. Refer to Frame 6.
10. Check the pilot ignition.

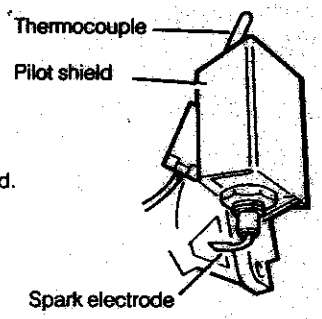

16 THERMOCOUPLE REPLACEMENT

1. Refer to Frame 8.
2. Remove the burner and air box assembly. Refer to Frame 3.
3. Remove the electrode retaining nut. Refer to Frame 11.
4. Remove the pilot shield and electrode.
5. Unscrew the central pilot fixing screw. Lift the pilot clear of the thermocouple and pilot injector. Refer to Frame 11.
6. Withdraw the thermocouple and fit the replacement. Re-assemble in reverse order, ensuring that no sharp bends are used on the thermocouple and the pilot shield is refitted.
7. Replace the boiler casing. Refer to Frame 6.
8. Check the operation of the thermocouple.

17 MAIN BURNER AND MAIN BURNER INJECTOR REPLACEMENT

1. Refer to Frame 8.
2. Remove the screw retaining the front of the burner support bracket to the combustion chamber.
3. Remove the M5 pozi screw and washer, situated at the left hand bottom rear of the burner. Pull the burner downwards to disengage the retention tab and remove the burner.
4. At this stage the main burner injector can be removed, checked, cleaned or replaced as required. Ensure that an approved jointing compound is used sparingly.
5. Fit new burner, ensuring that the retention tab is correctly located in the air box slot.
6. Refit the M5 retaining screw and washer.
7. Refit the front burner support bracket.
8. Refit boiler casing. Refer to Frame 6.
9. Check the burner for cross-lighting and flame stability.

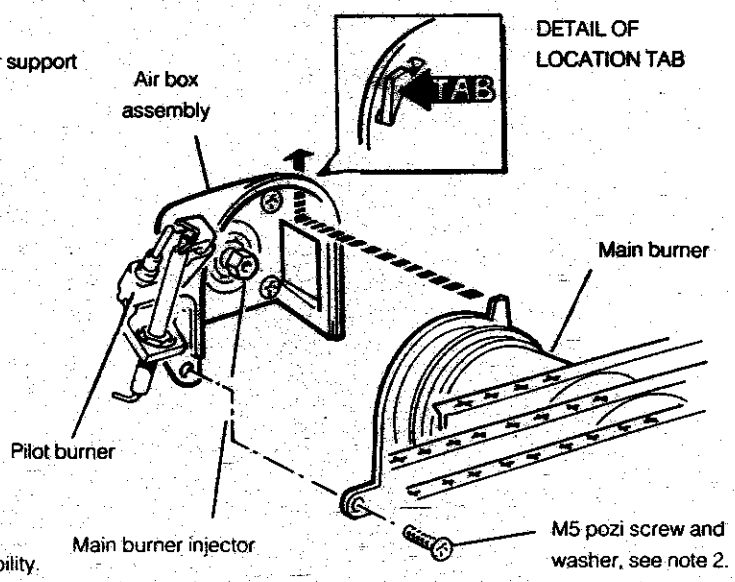

18 GAS CONTROL VALVE REPLACEMENT

1. Refer to Frame 8.
2. Remove the burner and air box assembly. Refer to Frame 3.
3. Turn off the gas supply at the service cock.
4. Remove the control box cover fixing screw & remove the cover.
5. Pull off the two electrical connections and the earth connection at the boiler thermostat.

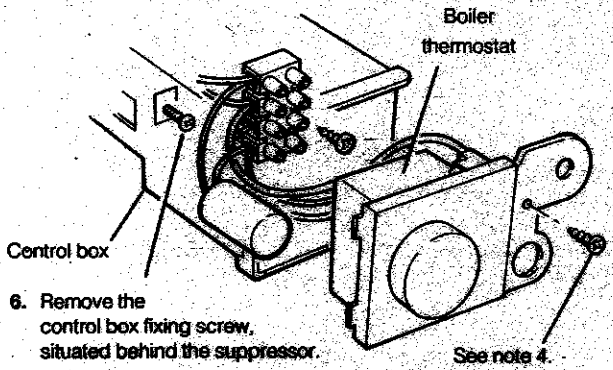

6. Remove the control box fixing screw, situated behind the suppressor.
7. Withdraw and suspend the control box. Pull off the gas valve solenoid connections and disconnect the earth connection at the solenoid. Pull off the 2 connections at the piezo generator.
8. Withdraw the thermostat phial from its pocket (refer to Frame 13).
9. Remove the four M4 extended screws retaining the gas service cock to the gas control.

Note. Refer also to Frame 25 'Exploded Views' for illustration of the procedure detailed below.

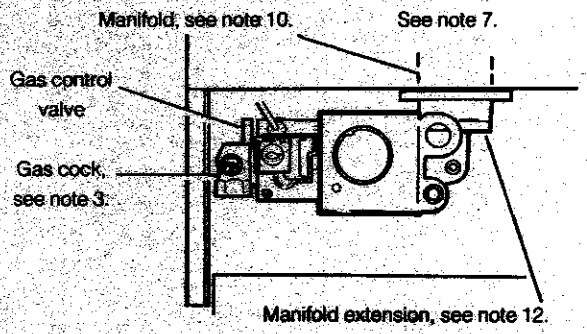

10. Whilst supporting the gas control valve, the two screws retaining the manifold to the back panel.
11. Remove the gas control / manifold assembly.
12. Remove the four screws retaining the manifold extension to the gas control and fit new gas control, ensuring that:
    (a) The new gas control is fitted the correct way round; an arrow is engraved on the back indicating the direction of gas flow.
    (b) The sealing gasket is correctly fitted.
13. Re-assemble in reverse order. **Note:** Do NOT overtighten the four gas cock retaining screws.
14. Replace the burner / air box assembly.
15. Replace the boiler casing. Refer to Frame 6.
16. Check the gas valve operation.

19 COMBUSTION CHAMBER INSULATION REPLACEMENT

1. Refer to Frame 8.
2. Remove the burner and air box assembly. Refer to Frame 3.
3. Remove the two front tie rods.
4. Remove the two side panel retaining brackets.
5. Remove the side insulation panels.
6. Remove the front and rear insulation panels.
7. Fit the new front & rear insulation panels.

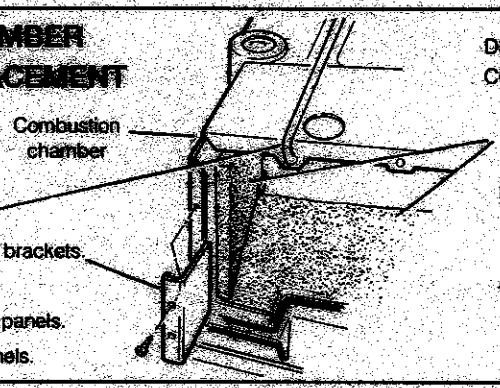

DETAIL OF BOILER COMBUSTION CHAMBER

8. Fit the new side panels and retain with the brackets and screws previously removed.
9. Re-fit the front tie rods.
10. Re-assemble the rest of the appliance in reverse order.

20 HEAT EXCHANGER REPLACEMENT

Note. Refer to Frame 24 of 'Exploded Views' for illustration of the procedure detailed below.

1. Refer to Frame 8.
2. Remove the burner and air box assembly. Refer to Frame 3.
3. Drain the system.
4. Disconnect the water flow and return connections. If compression fittings are used, cut the pipes both above and below the fittings in order to allow the heat exchanger assembly to be removed.
   Remove the heat exchanger drain plug and drain the residual water into a suitable receptacle.
5. Remove the collector hood . Refer to Frame 4.
6. Remove the 4 screws retaining the flue duct & remove the duct.
7. Remove the combustion chamber by unscrewing the nuts retaining the side tie rods.
8. Remove the four extended nuts retaining the gas service cock to the gas control valve.
9. Remove the control box cover & control box. Refer to Frame 18. Unclip the thermostat capillary and remove the phial from the pocket. Refer to Frame 13.
10. Remove the Programmer Kit (if fitted).
11. Remove the two screws retaining the manifold /gas control valve assembly to the backpanel and remove the assembly.
12. Slacken 3 turns only, the 4 screws retaining the heat exchanger / inter-panel assembly.
13. Lift the heat exchanger / inter-panel assembly upwards and forwards to disengage the keyhole fixings. Pull the assembly downwards to clear the water pipes from the back panel.
14. Remove the four rubber grommets from the top of the back panel, to facilitate the fitting of the new heat exchanger.
15. Fit the new heat exchanger assembly, complete with its 4 pipe connections and hang it on the 4 keyhole slots and screws. Retighten the 4 screws.
16. Replace the 4 rubber grommets in order to seal the gap between the water pipes and the back panel.
17. Re-assemble in reverse order. **Note:** Do NOT a overtighten the four gas cock retaining screws.
18. Remake all water connections, ensuring that the compression fittings (if used) are correctly refitted.
19. Fullly test all functions, including water and gas soundness.

21 CASING SEAL REPLACEMENT

1. Refer to Frame 8.

INNER VIEW OF BOILER CASING

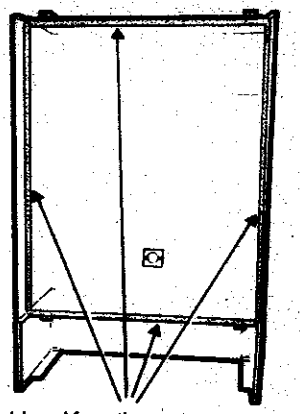

2. Remove the old seal from the casing surround.
3. Thoroughly clean the casing surfaces & fit the adhesive seals.
4. Replace the boiler casing. Refer to Frame 6.

22 GAS VALVE SOLENOID REPLACEMENT

1. Refer to Frame 8.
2. Remove the fixing screw retaining the control box cover and remove the cover.

DETAIL OF CONTROL BOX

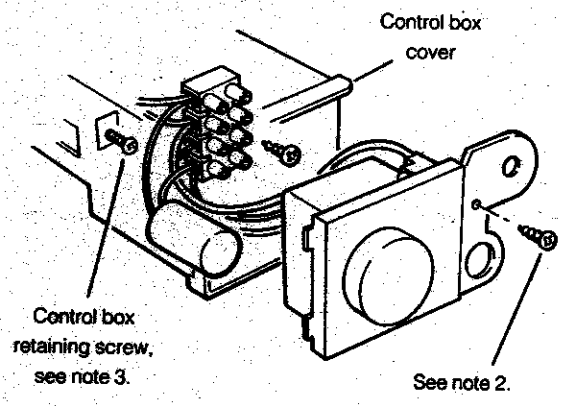

3. Unscrew the control box retaining screw and remove the box from the gas control valve.
4. Pull off the electrical connections at the solenoid and remove the earth wire connection at the solenoid bracket.
5. Remove and replace the solenoid coil as shown below.

DETAIL OF GAS CONTROL VALVE

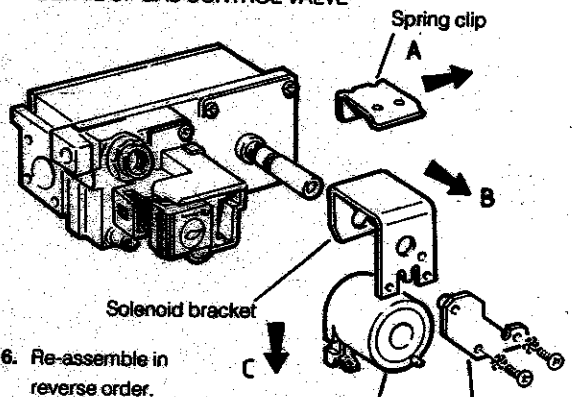

6. Re-assemble in reverse order.
7. Replace the boiler casing. Refer to Frame 6.
8. Check the function of the gas control valve.

23 PROGRAMMER REPLACEMENT (if fitted)

1. Refer to Frame 8.
2. Remove the boiler control box cover and release the terminal strip fixing screw.
   Disconnect the 'L', 'N' and '⏚' connections from the terminal strip and release the cable clamp.

DETAIL OF BOILER CONTROL BOX

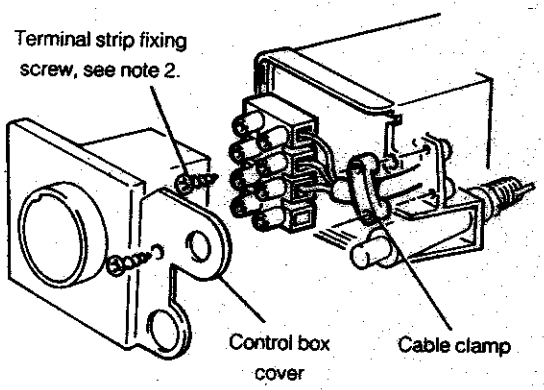

3. Remove the 2 screws retaining the programmer mounting bracket to the back panel mounting bracket.
4. Pull the programmer mounting bracket downward and forward in order to disengage the terminal strip connection.
5. Remove the 2 screws fastening the stainless steel lid to the programmer mounting bracket and remove the lid.
6. Slide the programmer upwards in order to clear the mounting bracket.
7. Remove the strain relief bush retaining the control box feed cable and remove the earth lead from the earth post.
8. Remove the 3 screws retaining the terminal strip to the programmer mounting bracket.
9. Remove the programmer, complete with its terminal strip and wiring harness.
10. Fit the new programmer, terminal strip and wiring harness in reverse order.
11. Set the programmer to the desired programme and test its functions.

DETAIL OF PROGRAMMER

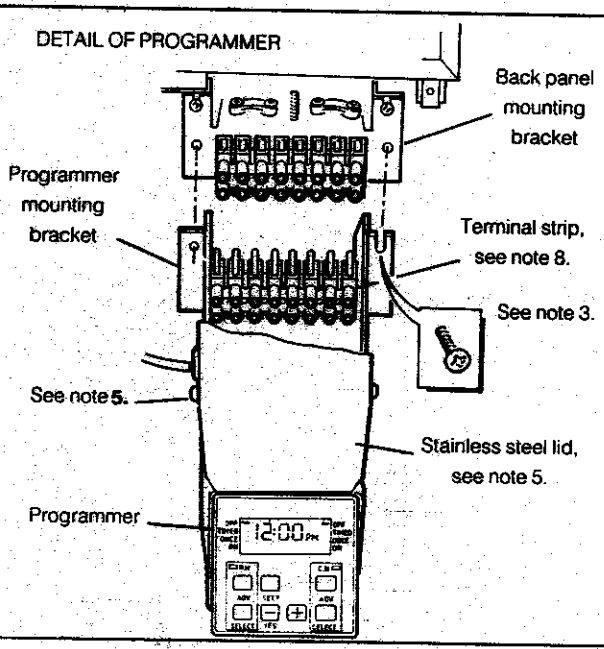

24 BOILER ASSEMBLY - Exploded view

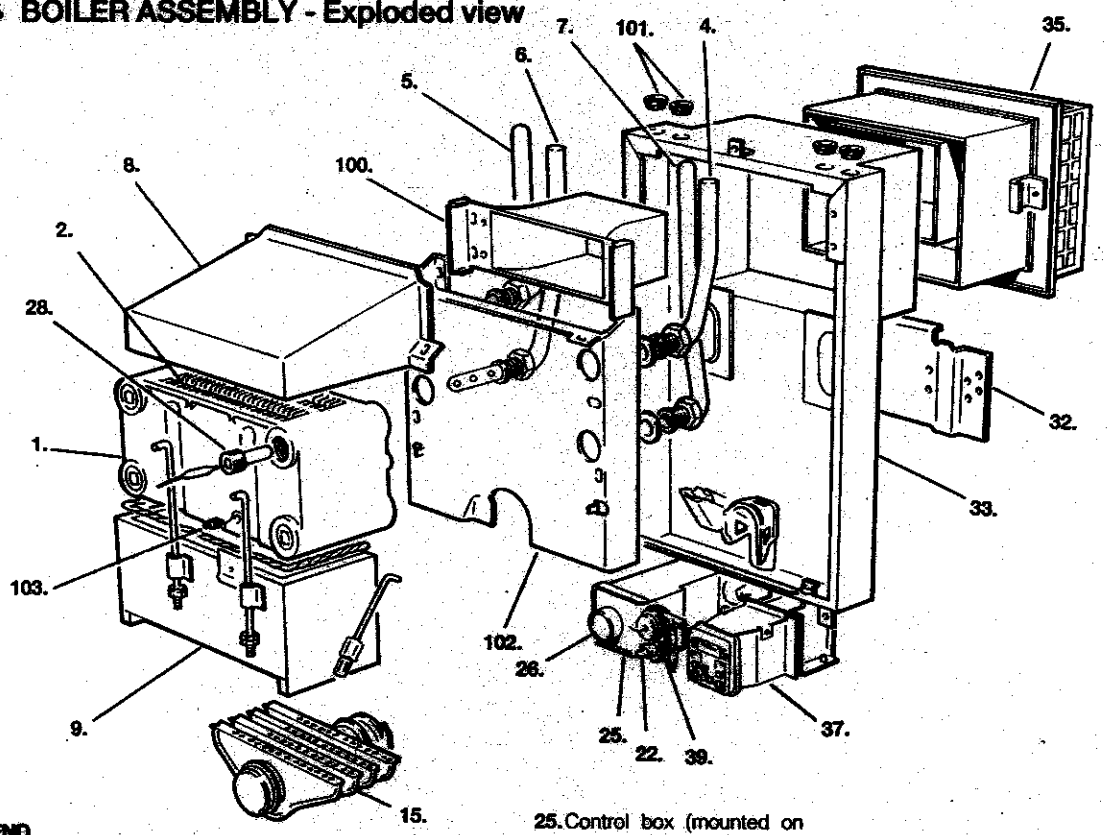

LEGEND
(Numbers up to 39 relate to the B.G. spares list)

1. Heat exchanger.
2. Flue baffles (RS 50P only).
4. Pumped flow pipe.
5. Gravity flow pipe.
6. Pumped return pipe.
7. Gravity return pipe.
8. Collector hood.
9. Combustion chamber.
15. Main burner.
22. Ignition button.
25. Control box (mounted on the gas control valve).
26. Boiler thermostat.
28. Thermostat pocket.
32. Wall mounting plate.
33. Back panel.
35. Balance flue terminal.
37. Programmer (optional).
39. Overheat thermostat (if fitted).
100. Boiler flue duct.
101. Rubber sealing grommets.
102. Interpanel.
103. Boiler drain point

25 BURNER AND CONTROLS - Exploded view

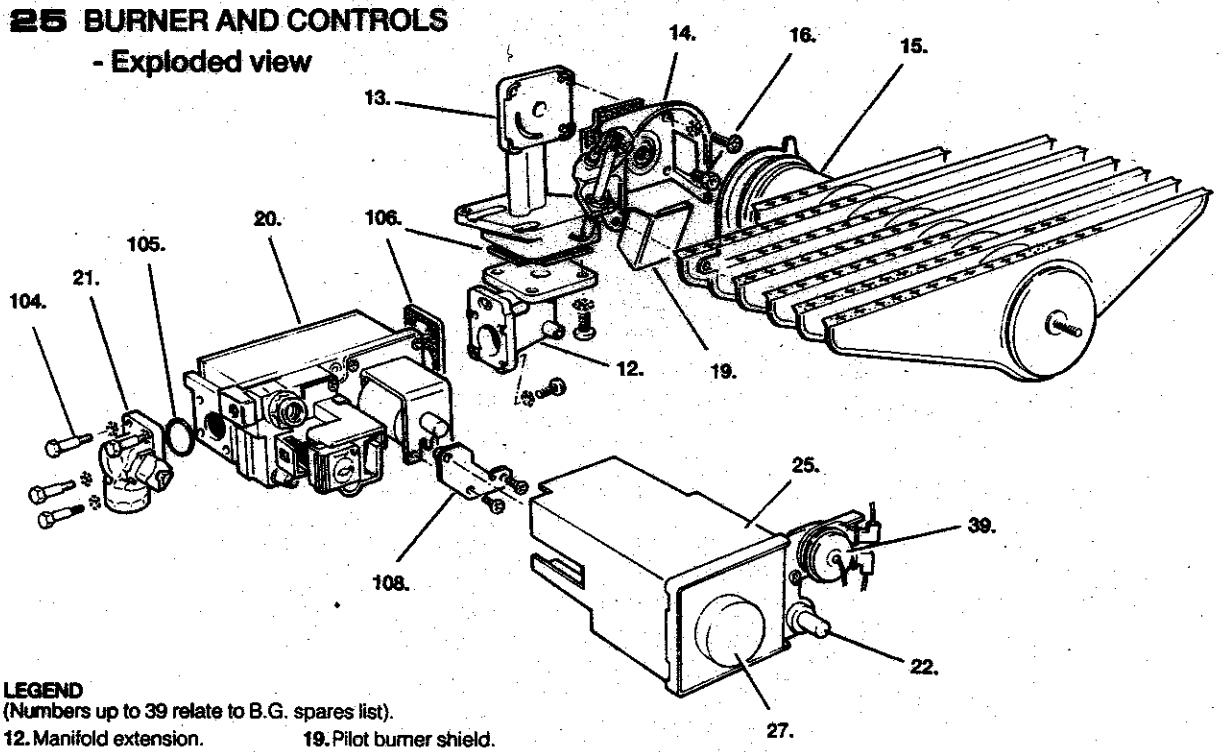

LEGEND
(Numbers up to 39 relate to B.G. spares list).

12. Manifold extension.
13. Burner manifold.
14. Air box & pilot burner assy.
15. Main burner.
16. Main burner injector.
19. Pilot burner shield.
20. Gas control valve.
21. Gas service cock.
22. Piezo unit.
25. Control box.
27. Boiler thermostat knob.
39. Overheat thermost at (if fitted).
104. Extended nuts.
105. '0' ring.
106. Sealing gasket.
108. Control box mounting bracket.

Before attempting any electrical fault finding, ALWAYS carry out the preliminary electrical system checks as detailed in the Instructions for the British Gas Multimeter, or similar test meter.

Detailed instructions on the cleaning & adjustment or replacement of faulty components are contained in the 'Servicing' section, of this publication.

26 PILOT WILL NOT LIGHT

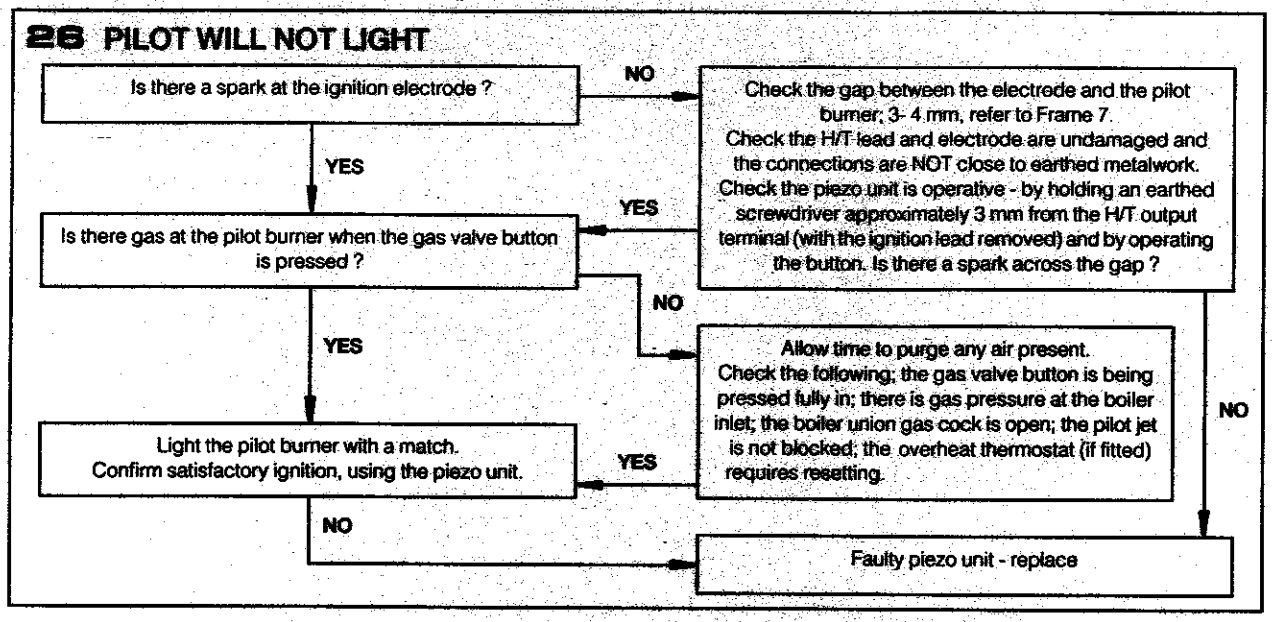

27 PILOT WILL NOT STAY LIT WHEN THE GAS VALVE BUTTON IS RELEASED

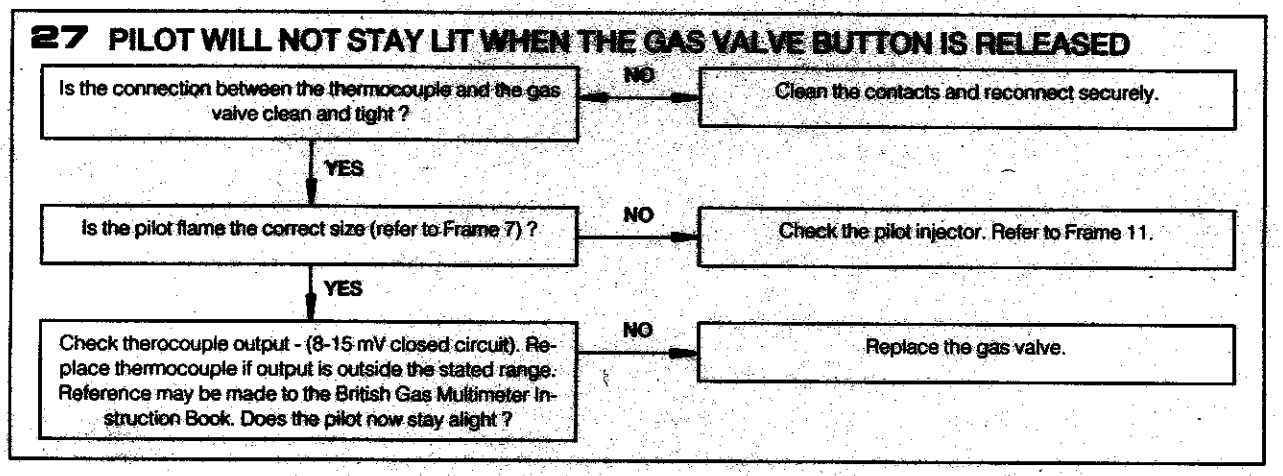

28 PILOT LIT BUT NO MAINS GAS

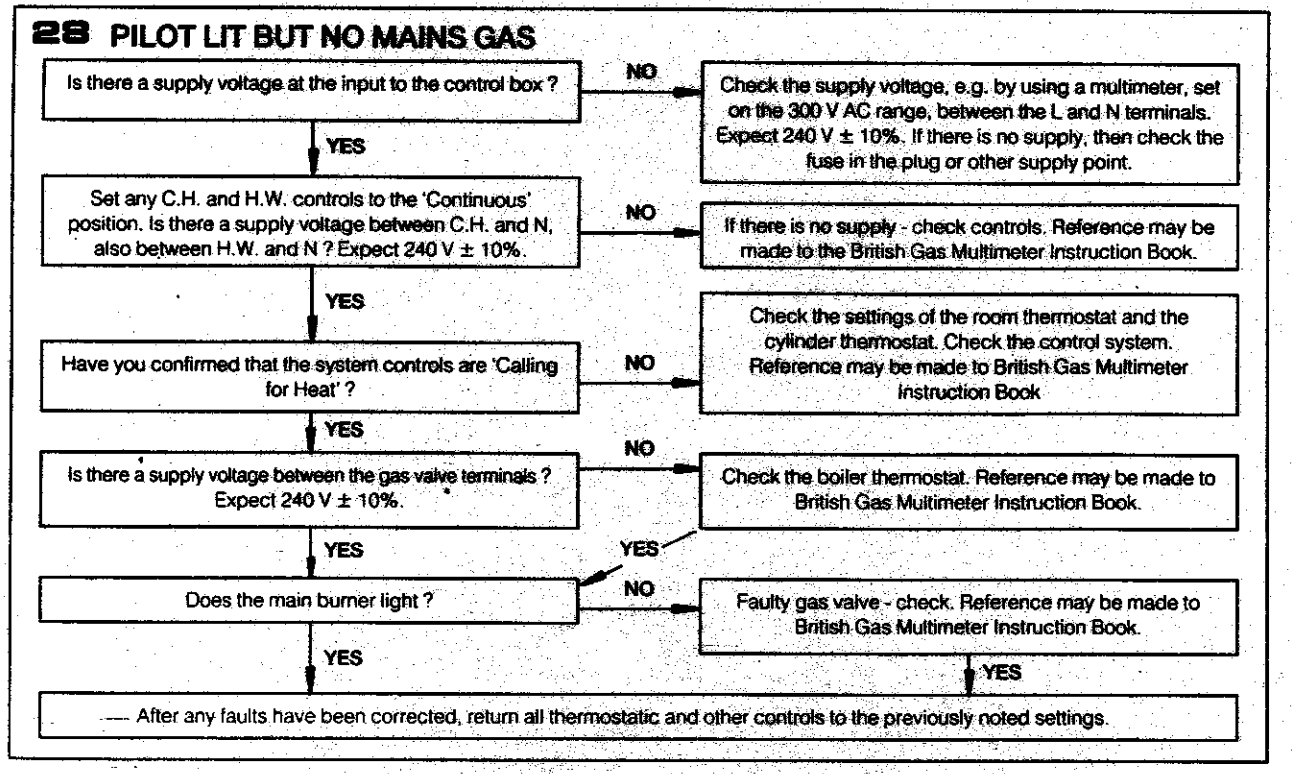

SHORT LIST OF PARTS

The following list comprises parts commonly required as replacement components due to damage, expendability, or such that their failure or absence is likely to affect safety or performance.

The list is extracted from the British Gas List of Parts, which contains all available spare parts.

Details of the British Gas lists are held by gas regions, Caradon Ideal Ltd. distributors and merchants.

Ideal Classic RS 50 P and RS 60 P Gas Boilers.

When ordering spares please quote:

1. Boiler Model
2. Description
3. Maker's Part Number
4. Quantity

Key No.	G.C. Part No.	Description	No. Off	Makers Part No.
11	319 493	Sightglass assembly kit.	1	160 079 333
15		Main burner.		
	... ...	AEROMATIC No. AC 19/123 280 with internal gauze; RS 50 P	1	... ...
	... ...	AEROMATIC No. AC 19/123 281 with internal gauze; RS 60 P	1	... ...
15 A	... ...	Main burner gauze; RS 50 P	1	... ...
	... ...	Main burner gauze; RS 60 P	1	... ...
16		Main burner injector.		
	... ...	BRAY Cat. 10 - size 540; RS 50 P	1	... ...
	... ...	BRAY Cat. 10 - size 650; RS 60 P	1	... ...
17	... ...	Pilot burner injector. HONEYWELL 458 01075 - 003 (stamped 20 / 23p)	1	... ...
18	308 347	Pilot burner. HONEYWELL Q 359 A 1124	1	589 614 085
20	308 348	Gas control valve. HONEYWELL V 4700 E 1072, 240 V	1	586 611 900
22	395 705	Piezo unit, VERNITRON 60080	1	589 830 086
23	308 317	Ignition electrode. VERNITRON No. 1414	1	589 614 088
24	390 131	Thermocouple, HONEYWELL Q 309 A 2846, 18 in. lg.	1	586 811 720
25	308 319	Control box, including thermostat, thermostat knob and suppressor assembly	1	589 610 065
26	386 139	Thermostat, RANCO K 36 - L 1016 with 48 in. capillary	1	589 610 051
27	308 012	Thermostat knob	1	589 070 052
29	384 689	Suppressor assembly	1	589 040 030
30	308 322	Boiler casing assembly - white stove enamel, with sightglass and foil insulation	1	199 614 030
31	308 323	Controls casing door - white plastic, with Lighting Instructions	1	199 610 089
34	308 329	Boiler sealing pack	1	199 610 094
39	386 140	Overheat thermostat, RANCO LM 7 - P 9054 (sealed systems only)	1	589 610 074

29 SHORT PARTS

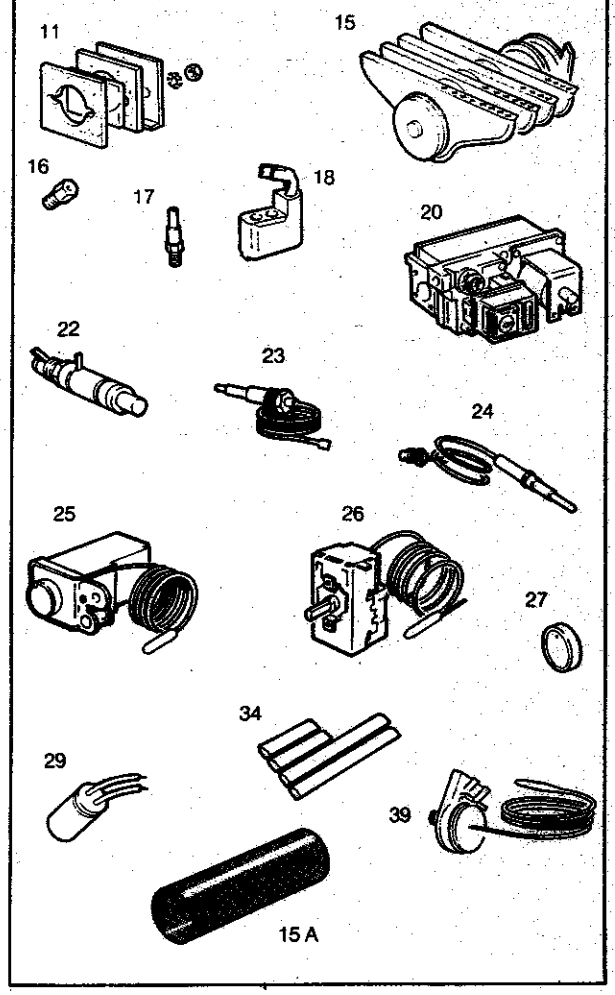

30 BOILER CASING ASSEMBLY

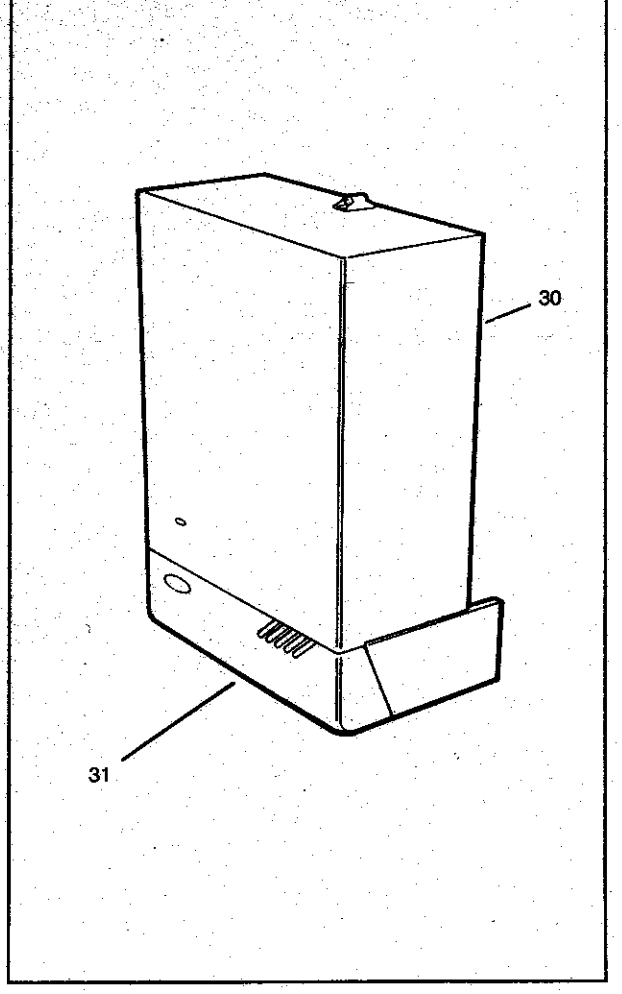

CARADON IDEAL Ltd. pursues a policy of continuing improvement in the design and performance of its products. The right is therefore reserved to vary specification without notice.

CARADON IDEAL Ltd.

P.O. Box 103, National Avenue,
Kingston upon Hull,
North Humberside. HU5 4JN.
Telephone: 01482 492 251 Fax: 01482 448 858.
Registration No. London 322 137.
Registered Office; National Avenue, Kingston upon Hull,
North Humberside, HU5 4JN.
A subsidiary of Caradon p.l.c

August 1994 116 834 A05

Customer Care & Technical Support

Please use the following numbers for speedy assistance.

Spares. ..... *Tel: 01482 498 643*

Customer Care & Technical Support. ..... *Tel: 01482 498 610*

..... *Fax: 01482 498 666*

Publications/literature. ..... *Tel: 01482 498 467*

iIdeal BOILERS

Printed in England

IDEAL CLASSIC

RS 50 P & RS 60 P

Wall Mounted, Balanced Flue Gas Boilers.

User's Instructions.

CAUTION: To avoid the possibility of injury during the installation, servicing or cleaning of this appliance, care should be taken when handling edges of sheet steel components.

IMPORTANT: *This appliance is for use with* ***L.P.G. (PROPANE) ONLY.***

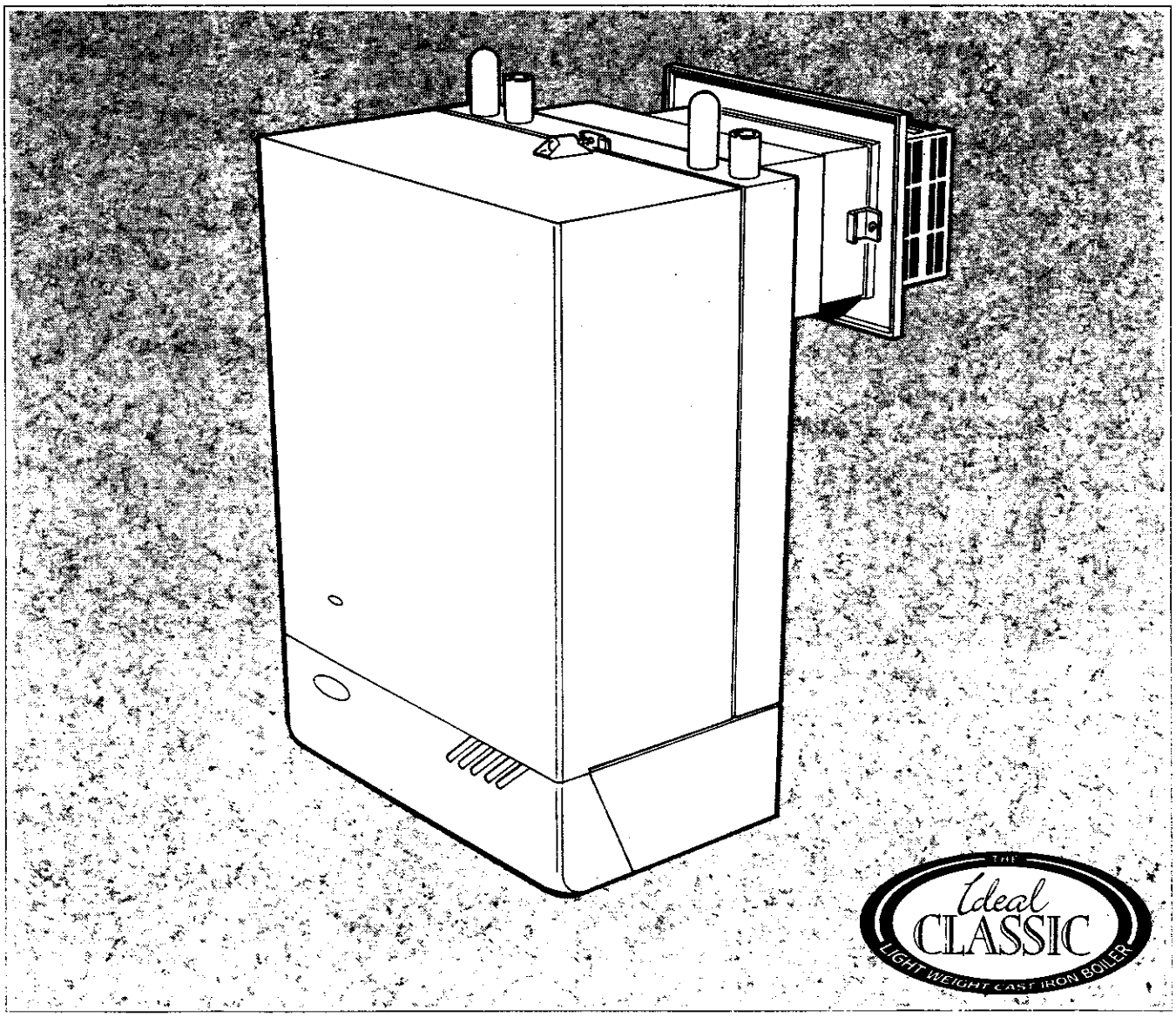

NOTE TO THE INSTALLER: LEAVE THESE INSTRUCTIONS WITH THE HOUSEHOLDER

The Gas Safety (Installation and Use) Regulations: 1984 impose certain statutory obligations on gas users.
Further information may be obtained on application to the Gas Region.

It is the law that all gas appliances are installed by competent persons e.g. CORGI (identified by) in accordance with the above regulations.

Failure to install appliances correctly could lead to prosecution. It is in your own interest and that of safety to ensure that the law is complied with.

ELECTRICITY SUPPLY

If a mains plug is used it MUST be a 3-pin type, wired as shown in Fig. 1 and fused at 3 A.

This appliance MUST be efficiently earthed.

As the colour of the wires in the mains lead of this appliance may not correspond with the coloured markings identifying the terminals in your plug, proceed as follows:

The wire which is coloured GREEN and YELLOW must be connected to the terminal in the plug which is marked with the letter E or by the earth symbol ' ⏚ ' or coloured GREEN or GREEN and YELLOW.

The wire which is colourd BLUE must be connected to the terminal which is marked with the letter N or coloured BLACK.

The wire which is coloured BROWN must be connected to the terminal which is marked with the letter L or coloured RED.

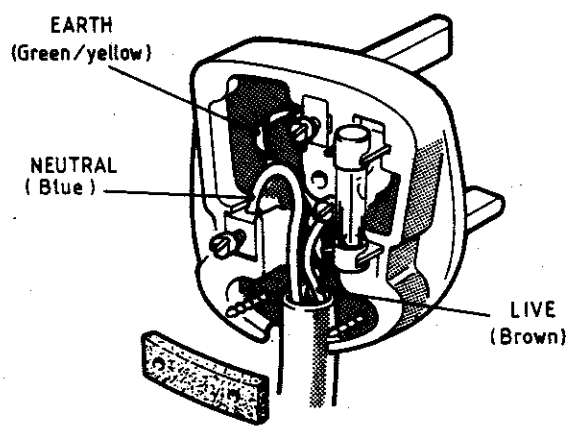

Supply: 240 V ~ 50 Hz, fused at 3 A.

Fig.1 **THREE-PIN PLUG (To BS.1363)**

MINIMUM CLEARANCES

The minimum clearances given below MUST be complied with in order to maintain the safe running of the boiler and to facilitate servicing.

Above the boiler	100 mm (4 in.)
At each side of the boiler	5 mm (1/4 in.)
Underneath the boiler	100 mm (4 in.)
In front of the boiler	450 mm (17 3/4 in.)

IMPORTANT NOTES

(a) THIS APPLIANCE MUST NOT BE OPERATED WITHOUT THE CASING CORRECTLY FITTED AND FORMING AN ADEQUATE SEAL.

(b) If the boiler is installed in a compartment, then the compartment MUST NOT be used for storage

(c) The ventilation provided for the boiler during installation MUST NOT be blocked and a check should be made periodically that the ventilation areas are free from any obstruction.

(d) If it is known or suspected that a fault exists on the boiler then it MUST NOT be used until the fault has been corrected by a competent person.

It is essential that the instructions in this booklet are strictly followed for safe and ecomonical operation of the boiler.

TO LIGHT THE BOILER. Refer to Fig. 2.

1. CHECK THAT THE ELECTRICITY SUPPLY TO THE BOILER IS OFF.
2. Open the controls access door by hinging downwards.
3. Ensure the gas inlet cock (H) is OPEN.
4. Ensure the boiler thermostat knob (C) is in the OFF (0) position.
5. Slide the gas control knob (A) to the RIGHT until resistance is felt and then release it.
   WAIT FOR THREE MINUTES.
6. Push in the gas control knob (A) and hold it depressed. Push in and release the igniter button (D) repeatedly, until the pilot flame can be seen through the sightglass (B). When the pilot has lit, continue to press in the gas control knob for a further 15 seconds.
7. Should the pilot go out at this, or any other stage, slide the gas control knob (A) to the RIGHT.
   WAIT FOR THREE MINUTES and then repeat instruction 6, but wait for longer than fifteen seconds before releasing the gas control knob (A).
8. Switch ON the electricity supply to the boiler.
   Check that all external controls e.g. room thermostat etc., are ON.
9. Turn the boiler thermostat knob (C) to position '6' and the boiler will light.
   Set the boiler thermostat to the desired position.
10. Close the controls access door.

In **winter conditions**, i.e. central heating and domestic hot water, the thermostat should be set at position '5' or '6'.

For **summer conditions**, i.e. domestic hot water only, the thermostat should be set at position '3'.

However, these settings are offered for general guidance only and other settings may be found preferable, dependent upon the type of system installed or as recommended by the Installer.

Approximate flow temperatures for the boiler thermostat settings are:

Knob Setting	Flow Temperature °C	°F
1	56	133
2	61	142
3	66	152
4	72	161
5	77	170
6	82	180

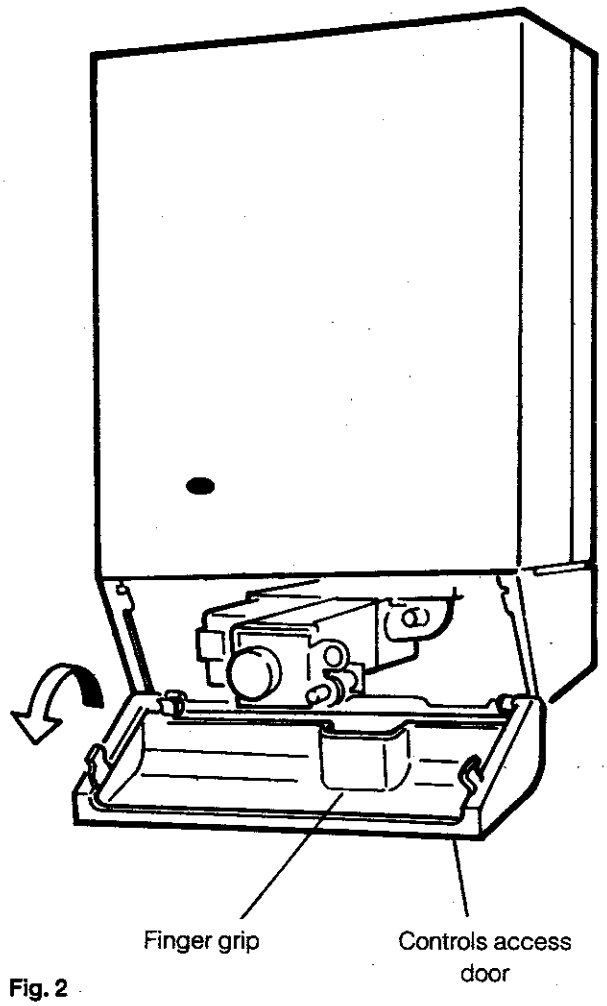

LEGEND

- **A** Gas control knob
- **B** Sightglass
- **C** Thermostat knob
- **D** Igniter button
- **H** Gas inlet cock (shown in the OPEN position)
- **F** Overheat thermostat reset button (SEALED SYSTEMS ONLY) situated behind the control box cover.

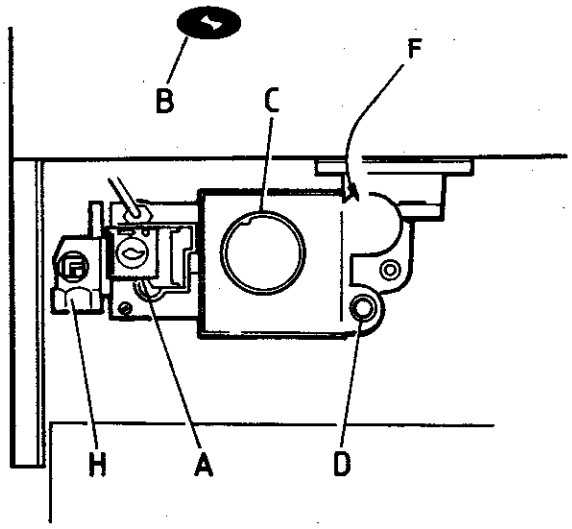

VIEW INSIDE BOILER CONTROLS AREA

Fig. 2 **BOILER CONTROLS**

TO SHUT DOWN THE BOILER

1. **For short periods.**

   Turn the boiler thermostat knob to OFF.

   When heating is again required, restore the knob to its original settings.

2. **For longer periods.**

   Turn the boiler thermostat knob to OFF.
   Slide the gas control knob (A) to the right until resistance is felt and then release it to extinguish the pilot burner.

   Switch the electricity supply to OFF.

WARNING. If no frost protection is provided and frost is likely during a short absence from home, leave the heating controls at a reduced temperature setting.

For longer periods, the entire system should be drained - including the domestic water supply. If the system includes a frost thermostat, then during cold weather, the boiler should be turned OFF at the time switch(es) ONLY. The mains supply should be left switched ON with the boiler thermostat left in the normal running position.

BOILER OVERHEAT THERMOSTAT
(Fitted for sealed systems only).

The boiler is fitted with a safety 'cut-out' thermostat.This thermostat will extinguish the pilot and shut down the boiler in the event of overheating.

Should this occur, allow the boiler to cool, press the reset (F) & then re-light as detailed in steps 1-10 'To Light the Boiler'.

If the 'cut-out' condition still persists then turn off the boiler and consult your local Heating Installer.

CONTROL OF WATER TEMPERATURE

1. Adjust the boiler thermostat (C) to give the required temperature for central heating.
2. The boiler thermostat automatically switches the main burner OFF and ON to maintain the selected temperature. The pilot burner remains alight continuously to give re-ignition of the main burner.

TO RE-LIGHT THE BOILER

Repeat the procedure 1-10 detailed in 'To Light the Boiler'.

LOSS OF SYSTEM WATER PRESSURE
Boilers fitted with the Sealed System Module only.

If the red arrow on the module pressure gauge is set above zero and the system pressure is seen to fall below this value over a period of time, then a water leak is indicated. In this event your local heating installer should be consulted.
DO NOT FIRE THE BOILER IF THE PRESSURE HAS REDUCED TO ZERO FROM THE ORIGINAL SETTING.

ESCAPE OF GAS

See the 'EMERGENCY ACTION NOTICE' at the back of this publication.

CLEANING

For normal cleaning simply dust with a dry cloth.
To remove stubborn marks and stains, wipe with a damp cloth and finish off with a dry cloth.

Do NOT use abrasive cleaning materials.

MAINTENANCE

The appliance should be serviced at least once a year by a [illegible]

CHANGING GAS CYLINDERS

1. Ensure that the replacement gas cylinder is the correct one for the installation.
2. Extinguish any fire, flame or source of ignition (including cigarettes, pipes and pilot lights) before changing gas cylinders.
3. Change cylinders with caution.
4. Ensure that the gas cylinder valve(s) is/are closed before disconnecting an empty cylinder or before removing any plastic cap or plug on the outlet connection of the replacement cylinder.

   Never use tools on cylinder valves, hand wheels or levers.

   Note. Cylinders with threaded connections have left-hand thread. For cylinders with self sealing/clip on valves, ensure that the regulator tap is closed before disconnection.
5. Ensure that the replacement cylinder connections are gas-tight. Any leaking vapour will smell.
   Test by brushing with soapy water around the connections; bubbles will form if vapour is leaking.

   Never use a naked flame.
6. It is essential that the correct pressure regulator with the correct pressure setting and capacity for the installation is used in accordance with the manufacturer's instructions.
7. In the case of connection on a pressure regulator or gas appliance which relies upon a sealing washer to maintain a gas-tight joint, it is essential to check that the washer is present, that it is sound and is correctly positioned prior to making the connection.
   Where the connection relies on a metal-to-metal seating or bullnose connection to obtain a gas-tight joint, it is essential that the mating surfaces be clean and undamaged.

   In no circumstances should a damaged valve or connection be used.
8. Where connections are designed to be tightened with a spanner, it is essential that a spanner of the correct size is used and that the union is firmly tightened; hand tightness is not sufficient.
   When self-sealing valves are incorporated in a gas cylinder, connections should be made in accordance with the manufacturer's instructions and tools should not be used.
9. If the continuation of supply is interrupted when a cylinder is changed, it is essential that all appliance taps are turned off before the change is made.
10. With bulk storage tanks, always ensure that the site is kept clean and clear of rubbish. Such vessels are designed to be filled on site by the gas distributors.

EMERGENCY ACTION NOTICE

GAS LEAKAGE * (Usually detected by a distinctive smell).

DO NOT OPERATE ELECTRICAL SWITCHES.

***NEVER LOOK FOR A LEAK WITH A NAKED FLAME** **

IMMEDIATE ACTION

CLOSE all cylinder valves.

EXTINGUISH all sources of ignition.

OPEN all doors and windows.

If the leakage cannot be stopped, REMOVE THE CYLINDERS to a safe place in the open air and advise the supplier. If this is not possible, evacuate the premises and call the fire brigade.

DO NOT USE THE INSTALLATION until it has been checked by the gas supplier or other competent person.

FIRE *

IMMEDIATE ACTION.

IF IT SAFE TO DO SO, SHUT OFF THE GAS SUPPLY.

Do not attempt to extinguish a gas flame by any other means.

Raise the alarm and call the fire brigade * stating that a liquefied petroleum gas cylinder is involved and its location.

DO NOT GO NEAR if a cylinder is being heated by fire.

ALERT EVERYONE in the immediate area of the fire and evacuate the building.

ADVISE THE FIRE BRIGADE on their arrival of the LOCATION OF THE CYLINDER.

If a cylinder is not involved in the fire *and it is safe to do so*, close all cylinder valves and remove the cylinders to a safe place.

CARADON IDEAL Ltd. pursues a policy of continuing improvement in the design and performance of its products. The right is therefore reserved to vary specification without notice.

CARADON IDEAL Ltd,

P.O. Box 103, National Avenue,

Kingston upon Hull,

North Humberside. HU5 4JN.

Telephone: 01482 492 251 Fax: 01482 448 858.

Registration No. London 322 137.

Registered Office; National Avenue, Kingston upon Hull,

North Humberside, HU5 4JN.

A subsidiary of Caradon p.l.c

August 1994 116 833 A03

Ideal BOILERS

Printed in England