POTTERTON

Prima

30B, 40B, 50B & 60B
balanced flue gas fired boiler

THIS APPLIANCE IS FOR USE WITH NATURAL GAS (G20) ONLY

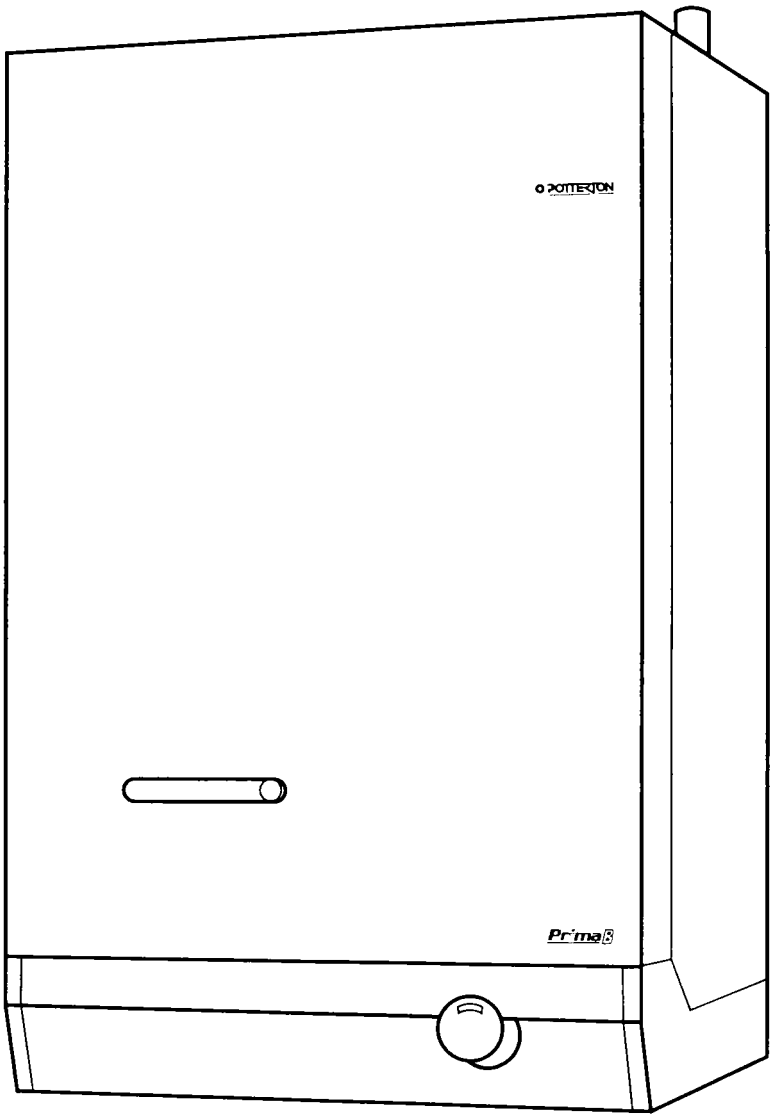

Installation and Servicing Instructions

LEAVE THESE INSTRUCTIONS ADJACENT TO THE GAS METER

POTTERTON PRIMA 30B G.C. No. 41 .605.94
POTTERTON PRIMA 40B G.C. No. 41 .605.95
POTTERTON PRIMA 50B G.C. No. 41 .605.96
POTTERTON PRIMA 60B G.C. No. 41 .605.97

IMPORTANT This appliance must be installed by a competent person as stated in the Gas Safety (Installation and Use) Regulations 1994.

Prima boilers are certified for safety, it is therefore important that no external control devices (eg. flue dampers, economisers etc.) be directly connected to these appliances unless covered by these installation instructions or otherwise recommended in writing. Any direct connection of a control device not approved by Potterton could invalidate the certification and the normal warranty.

LIST OF CONTENTS

GENERAL - Page 2

Once the pilot has been lit Potterton Prima B boilers are automatic in operation. They are wall mounted natural draught balanced flue appliances, using a cast iron heat exchanger and are available in four outputs ranging from 5.86-17.58kW (20,000-60,000 Btu/h).

The boilers which are designed to provide domestic hot water and/or central heating must be used on INDIRECT hot water systems only. The cast iron heat exchangers suitable for use on. open vented gravity hot water/pumped central systems or fully pumped systems which may be sealed or open vented.

The standard balanced flue system (Part No.230043) can be adjusted telescopically for wall thicknesses of 230mm-380mm (9-15’). Further adjustment can be made down to a minimum wall thickness of 76mm (3) by cutting the ducts.

For convenience, a lOOmm-175mm (4”-7’) telescopic flue kit (Part No.230400) is available as an alternative to the standard.

OPTIONAL EXTRAS - Page 2

The following are available as optional extras:-
FLUE EXTENSION KIT, suitable for a maximum wall thickness of 610mm (24in)
Part No. 230230.
Part No. 230400
TERMINAL GUARD Part No.903766 to be used when the terminal is fitted less than 2m above a balcony, above ground or above a flat roof to which people have access.

PUMP COVER KITS, to conceal a pump at the top of a boiler, in the following sizes:

Fixed (6in high)	Part No. 225418
Adjustable (7in-1 2in)	Part No. 225419
Adjustable (l3in-l8in)	Part No. 225420
Adjustable (l9in-24in)	Part No. 225421

ACCESSORIES - Page 3

The following range of Potterton Myson system controls are also available and further information will be provided on request.

Electronic Programmer EP2001, EP3001, EP4001, EP5001 and EP6000.
Programmable Electronic Thermostat PET 1.
Thermostatic Radiator Valve.
Electronic Cylinder Thermostat PTT2 or PTT1 00
Electronic Room Thermostat PRT2 or PRT1 00
Motorised Zone Valve M5V222 or MSV228
Motorised Diverter Valve M5V322

INSTALLATION DATA - Page 3

The installation of the boiler must be in accordance with the latest relevant requirements of the Gas Safety (Installation and Use) Regulations 1994, local building regulations, IEE Wiring Regulations and the byelaws of the local Water Undertaking.

Detailed recommendations are contained in the following British Standard Codes of Practice:-

BS6798. BS5440 Part 1.
BS5440 Part 2. BS5449 Part 1.
BS5546, BS4814,
BS6891 BUILDING REGULATIONS.
MODEL WATER BYELAWS.
BRITISH GAS PUBLICATION DM2.
GAS SAFETY (INSTALLATION AND USE) REGULATIONS 1994.
BUILDING STANDARDS (SCOTLAND) REGULATIONS.

BOILER DIMENSIONS - Page 3

Figure 1 BOILER DIMENSIONS

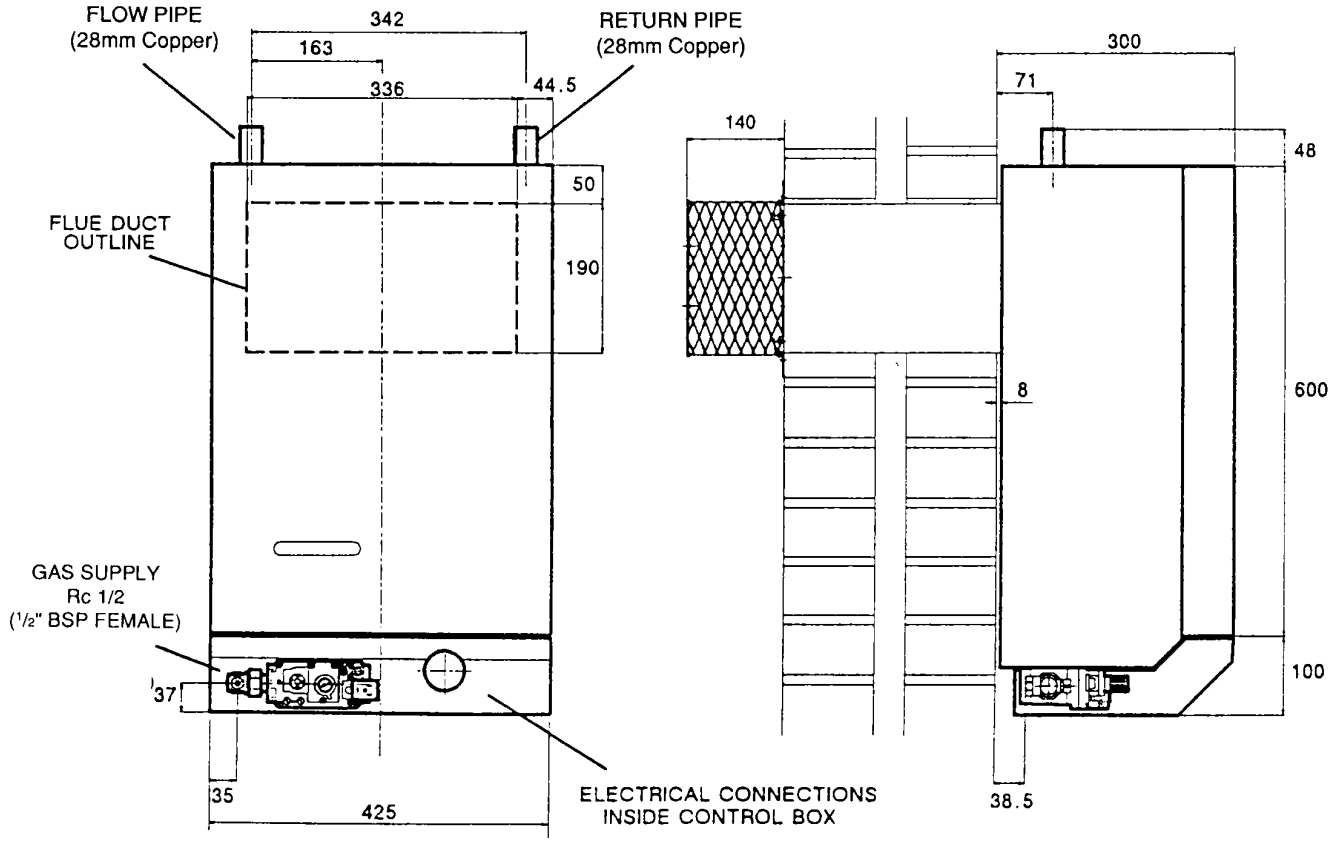

Figure 2 GENERAL ARRANGEMENT

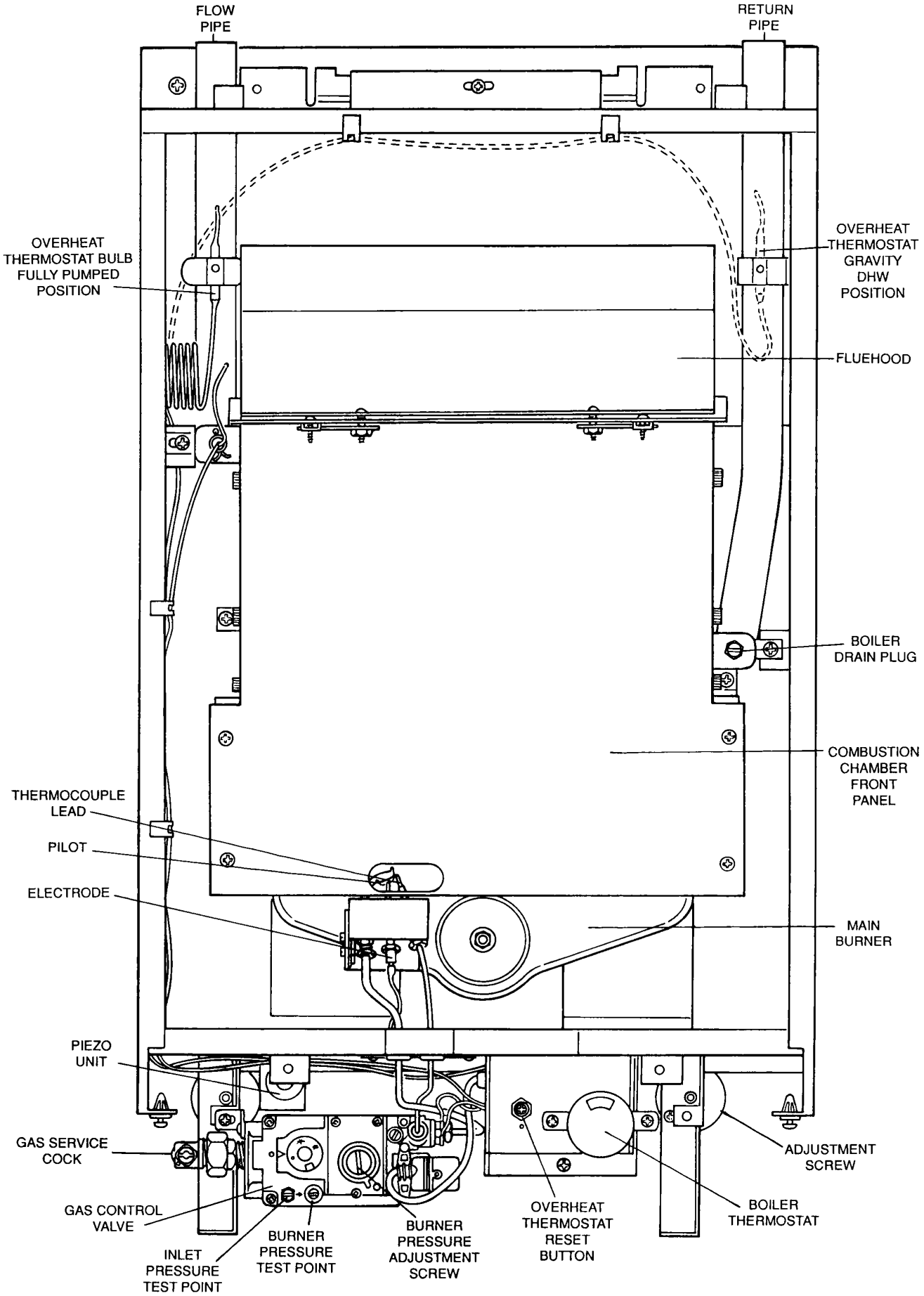

These boilers are not suitable for external installation. The appliance may be installed in any room, although particular attention is drawn to the requirements of the current IEE wiring regulations and, in Scotland, the electrical provisions of the Building Standards applicable in Scotland with respect to the installation of the appliance in a room containing a bath or shower.

Where a room-sealed appliance is installed in a room containing a bath or shower, any electrical switch or appliance control, utilising mains electricity, should be so situated that it cannot be touched by a person using the bath or shower.

If installed in a bathroom, the point of connection to the external electricity supply MUST be outside the room. Where the installation of the boiler will be in an unusual location special procedures may be necessary and BS6798 gives detailed guidance on this aspect.

Ensure that the gas supply pipe and meter are large enough for this appliance and any others that may be run off the same meter. Reference should be made to BS6891.

Boiler Mounting Surface.

The boiler must be mounted on a flat wall, which may be of combustible material and must be sufficiently robust to take the weight of the boiler. The requirements of the local authorities and the Building Regulations must be adhered to.

IMPORTANT NOTICE:

TIMBER FRAMED HOUSES
If the appliance is to be fitted in a timber framed building, it should be fitted in accordance with British Gas Publication 'Operational Procedures for Customer Service' Part 19. If in any doubt, advice should be sought from the local region of British Gas.

Clearances Around the Boiler

The following minimum clearances must be maintained after installation for correct operation and servicing of the boiler:-610mm (2ft) at the front of the boiler.
5mm (0.2in) each side of the boiler.
50mm (2in) at the top, except where the optional pump cover is to be fitted, when 178mm (7in) should be allowed.
102mm (4in) at the bottom.
Additional clearances to these may be required for installation and are left to the discretion of the installer.

Ventilation

If the boiler is to be installed in a confined space such as a cupboard, the space will need ventilating. Openings must be provided at the top and bottom of the cupboard each of which should have a free area as shown in TABLE 1. Further details for installation of a boiler within a compartment are given in BS6798.

TABLE 1

PRIMA B	Area for air from room		Area for air from outside	
	sq. in	sq. cm	sq. in	sq. cm
30	16	103	8	52
40	22	140	11	70
50	27	174	14	87
60	33	208	17	104

Siting of Balanced Flue Terminal

If a terminal is less than 2m above a balcony, above ground or above a flat roof to which people have access then a suitable guard should be fitted (Part No. 903766). Refer to BS5440 Part 1 for further guidance. The minimum spacings from the terminal to obstructions and ventilation openings are shown in Figure 3.

Note:

Where a flue is fitted less than 1000mm from a plastic or painted gutter or 500mm from painted eaves, an aluminium shield of 1000mm length should be fitted to the underside of gutter or eave.
Any car port or other add-on extension should consist of a roof or a roof and one other wall. If it consists of a roof and two other walls the installation shall be treated as suspect and further advice sought.

Figure 3 THE SITING OF BALANCED FLUE TERMINAL BOILER

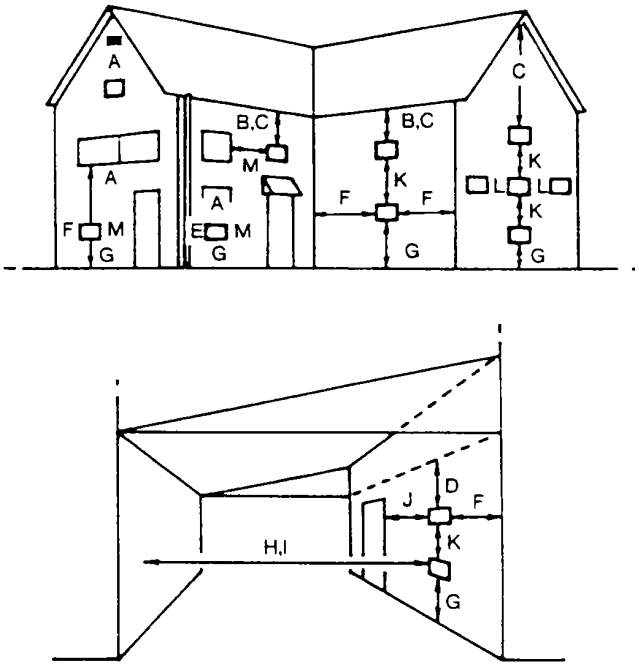

POSITION		MINIMUM DISTANCE mm
A.	DIRECTLY BELOW AN OPENABLE WINDOW, AIR VENT, OR ANY OTHER VENTILATION OPENING	300
B.	BELOW GUTTER, DRAIN/SOIL PIPE	300
C.	BELOW EAVES	300
D.	BELOW A BALCONY OR CAR PORT ROOF	600
E.	FROM VERTICAL DRAIN PIPES AND SOIL PIPES	75
F.	FROM INTERNAL OR EXTERNAL CORNERS	600
G.	ABOVE ADJACENT GROUND OR BALCONY LEVEL	300
H.	FROM A SURFACE FACING THE TERMINAL	600
I.	FACING TERMINALS	600
J.	FROM OPENING (DOOR/WINDOW) IN CARPORT INTO DWELLING	1200
K.	VERTICALLY FROM A TERMINAL ON THE SAME WALL	1500
L.	HORIZONTALLY FROM A TERMINAL ON THE SAME WALL	300
M.	ADJACENT TO OPENING	300

ELECTRICITY SUPPLY

A 240 volts 50Hz., single phase electricity supply fused at 3A must be provided in accordance with the latest edition of the lEE wiring regulations and any other local regulations that may apply. The current rating of the wiring to the boiler must exceed 3 amperes and have a cross sectional area of at least 0.75mm^2 in accordance with BS6500 1990 Table 16. The method of connection to the electricity supply MUST facilitate complete isolation of the appliance, preferably by the use of a fused three-pin plug and unswitched, shuttered socket outlet, both complying with the requirements of BS1363. Alternatively, connection may be made via a fused double pole isolator having a contact separation of 3mm in all poles and serving the appliance and system controls only.

TECHNICAL DATA - Page 6

Maximum Working Head	30.5m (l00ft)
Minimum Working Head (Fully pumped systems)	150mm (6in)
Minimum Circulating Head (Gravity systems)	1.2m (4ft)
Gas Supply Pressure	20 mbar
Maximum Flow Temperature	82 º C
Electricity Supply	240v 50Hz fused at 3A
Flow/Return Connection	28mm copper
Gas Supply Connection	Rc, ½ (½ in BSP Female)
Power Consumption	20 watts

	30 & 40 model	50 & 60 model
Water Content	1.8 litre	2.5 litre
	0.4 gal	0.55 gal
Appliance Weight installed	39.2 kg	46.8 kg
	86.0 lbs	103.3 lbs
Appliance Weight lift	31.0 kg	38.5 kg
	68.0 lbs	85.0 lbs

BOILER SIZE	INJECTOR SIZE	GAS RATE m^3/h (ft^3/h)	INPUT kW(Btu/h)	OUTPUT kW(Btu/h)	BURNER mbar	PRESSURE in wg
Min		0.72 (25.68)	7.79 (26579)	5.86 (20000)	6.8	2.7
30	2.6mm	0.89 (31.75)	9.63 (32858)	7.33 (25000)	11.2	4.5
Max		1.06 (37.88)	11.49 (39204)	8.79 (30000)	15.2	6.1
Min		1.08 (38.55)	11.69 (39900)	8.79 (30000)	8.5	3.4
40	3.1 mm	1.25 (44.80)	13.59 (46370)	10.26 (35000)	11.2	4.5
Max		1.41 (50.51)	15.32 (52280)	11.72 (40000)	15.0	6.0
Min		1.43 (51.11)	15.5 (52900)	11.72 (40000)	10.3	4.1
50	3.5 mm	1.59 (56.71)	17.20 (58700)	13.19 (45000)	12.8	5.1
Max		1.74 (62.32)	18.90 (64500)	14.65 (50000)	15.8	6.3
Min		1.81 (63.79)	19.35 (66022)	14.65 (50000)	10.0	4.0
60	3.9 mm	1.94 (69.22)	21.00 (71650)	16.12 (55000)	11.5	4.6
Max		2.09 (74.78)	22.68 (77400)	17.58 (60000)	13.5	5.4

Circulation Pump Selection

The resistance through the heat exchangers when operating with a water flow rate producing an 110 C temperature rise at maximum boiler output is shown in TABLE 2. If other controls, such as three-position valves are used in the system, the resistance through them, quoted in their manufacturers literature must be taken into account. The pump may be fitted on either the flow or return and on FULLY PUMPED systems MUST be wired directly to the boiler terminal block, see Fig 21. It must be fitted with two isolating valves which are positioned as close to the pump as possible. Isolation of the valves must always leave the open vent unobstructed.

Boiler Size	Water Flow Rate		Boiler Resistance Without Disc		Boiler Resistance With Disc	
	Litres/min	gal/min	kN/m^2	in wg	kN/m^2	in wg
30	11.37	2.5	0.63	2.5	1.75	7.0
40	15.18	3.34	1.13	4.5	3.0	12.0
50	18.96	4.17	1.75	7.0	4.5	18.0
60	22.73	5.0	2.5	10.0	6.25	25.0

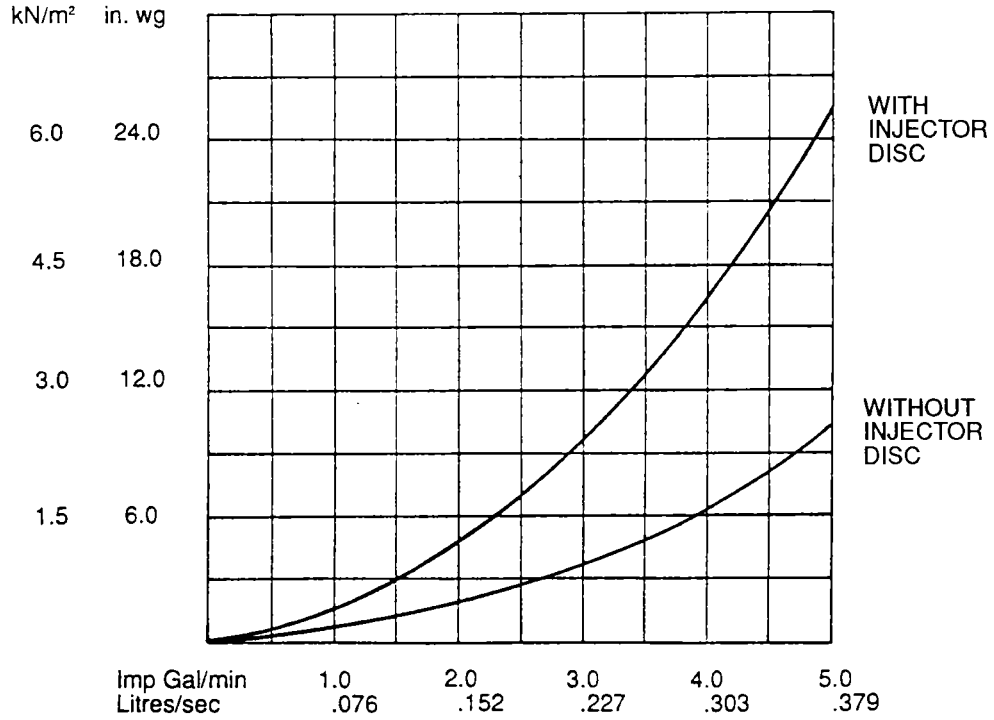

Figure 4 PRESSURE LOSS ACROSS BOILER

THE SYSTEM

The boiler must be used on INDIRECT hot water systems only. It is suitable for use on open vented gravity hot water/pumped central heating systems or fully pumped systems which may be sealed or open vented.

The system should be designed so that the maximum static head does not exceed 30.5m (l00ft) and a minimum on fully pumped systems of 150mm (6in). See Fig 5. Gravity domestic hot water circuits should have a minimum circulating head of 1.2m (4ft). See Fig 6. Excessive horizontal runs should be avoided, but if this not possible the circulating head should be increased.

If the boiler is to be used on a system with gravity hot water the bulb of the overheat thermostat should be repositioned as shown on Figs 2 & 18.

To prevent reverse circulation in the gravity circuit when the pump is running an injector disc is provided to form an injector tee at the return connection on the boiler.
See Fig 17.

To prevent nuisance operation of the overheat thermostat, it is important that where electrically operated zone valves are used the boiler is wired so that it does not cycle when the zone valves are closed. Also systems fitted with controls that close both hot water and central heating circuits while the boiler is still hot must be fitted with a by-pass circuit to dissipate the residual heat within the boiler.

Further information on by-pass arrangements is provided in later notes and illustrations.

Drain-off taps should be fitted in the pipework close to the boiler and in low points in the system.

NOTE

Although the system can be emptied using the drain-off taps in the pipework around the system, to empty the boiler it is necessary to remove the drain-off plug situated in the return header at the lower right-hand side of the casting. See Fig 2.

COMBINED GRAVITY HOT WATER AND PUMPED CENTRAL HEATING SYSTEMS

Where a cylinder thermostat and zone valve are fitted to control the temperature of the domestic hot water it is recommended that a by-pass be installed in the gravity circuit. A suggested method of doing this is shown in Fig 6 where the bathroom radiator is connected into the gravity circuit and is fitted with two lockshield valves. Mechanically operated thermostatic domestic hot water temperature control valves which allow the boiler to operate when the valve is closed
MUST NOT BE FITTED.

FULLY PUMPED SYSTEMS

The pump must always be wired directly to the boilerterminal block as shown in Fig 21. If a three port diverter valve is used as shown in Fig 5 a by-pass is not necessary since one circuit is always open.

Where a pair of two port valves are used, a by-pass is necessary. The total length of the by-pass circuit taken from the boiler connections should be greater than 4 metres of 22mm pipe. It should be fitted with a lockshield valve and adjusted to maintain a minimum flow through the boiler of 4.5 litres/mm (1 gal/mm), see Figs 5 &7.

Systems fitted with controls which allow the boiler to operate when both the hot water and central heating circuits are closed (i.e. mechanically operated thermostatic control valves) must be fitted with a by-pass circuit capable of:-

1. Dissipating a minimum of 1 kW (3400 Btu/h).
2. Maintaining a minimum water flow through the boiler of 9 litres/mm (2 gal/mm).

A suggested method of meeting these requirements by using a bathroom radiator fitted with two lockshield valves is shown in Figs 5 & 7.

Additional system information can be found in the Control Systems, Pipework and wiring guide.

SEALED SYSTEMS (FULLY PUMPED)

The installation must comply with the requirements of BS6798 and BS5449 Part 1.
The British Gas publication ‘British Gas

Specification for Domestic Wet Central Heating Systems' should also be consulted.

Safety Valve

A non-adjustable spring-loaded valve, pre-set to operate at 3bar (451bf/in^2) shall be used. It must comply with BS6759 Part 1 and include a manual testing device. It shall be positioned in the flow pipe either horizontally or vertically upwards and close to the boiler. No shut-off valves are to be placed between the boiler and safety valve. The valve shall be installed into a discharge pipe which permits the safe discharge of steam and hot water such that no hazard to persons or damage to electrical components is caused.

Pressure Gauge

A pressure gauge incorporating a fill pressure indicator, covering the range 1 4 bar (60lbf/in^2) shall be fitted to the system. It should be connected to the system, preferably at the same point as the expansion vessel. Its location should be visible from the filling point.

Expansion Vessel

A diaphragm-type expansion vessel to BS4814 Part 1 shall be fitted close to the inlet side of the pump. The connecting pipework should not be less than 15mm (½ in nominal). Pipework connecting the expansion vessel should not incorporate valves of any sort. Methods of supporting the vessel are supplied by the manufacturer. The nitrogen or air charge pressure of the expansion vessel shall not be less than the hydrostatic head, (height of the top of the system above the expansion vessel). To size the expansion vessel it is first necessary to calculate the volume of water in the system in litres. The following volumes may be used as a conservative guide to calculating the system volume.

Boiler Heat Exchanger	6.5 litres
Small Bore Pipework	1 litre per kW of system output
Micro Bore Pipework	7 litres
Steel Panel Radiators	8 litres per kW of system output
Low Water Capacity Radiators	2 litres per kW of system output
Hot Water Cylinder	2 litres

If the system is extended, the expansion vessel may have to be increased unless previous provision has been made for the extension. Where a vessel of the calculated size is not available, the next available larger size should be used. The boiler flow temperature is controlled at approximately 82 ºC.

The vessel size can now be determined from the following table where V = System volume in litres

Vessel Charge Pressure (bar)	0.5	1.0
Initial System Pressure (bar)	0.5	1.0
Expansion Vessel Volume (litres)	Vx0.833	Vx0.11

This is a general guide; if it is required to be more accurate refer to BS7074.

Cylinder

The hot water cylinder must be an indirect coil type or a direct cylinder fitted with an immersion calorifier suitable for operating at a pressure of 0.3bar (5 lbf/in^2) in excess of safety valve setting. Single feed indirect cylinders are not suitable for sealed systems.

Method of Make-Up

Provision shall be made for replacing water loss from the system either:-

i) from a make-up vessel or tank mounted in a position higher than the top point of the system, and connected through a non-return valve to the system on the return side of all heat emitters.

or

ii) Where access to a make-up vessel would be difficult by using the mains top up method or a remote automatic pressurisation and make-up unit as illustrated in Fig 7 METHODS 1 & 2.

Mains Connection

There shall be no connection to the mains water supply or to the water storage tank which supplies domestic water even through a non-return valve, without the approval of the local Water Authority.

Filling Point
The system shall be fitted with a filling point at low level which incorporates a stop valve to BS1010 and a double check valve (approved by the National Water Council) to be fitted in this order from the system mains. refer to Fig 7 METHOD 1.

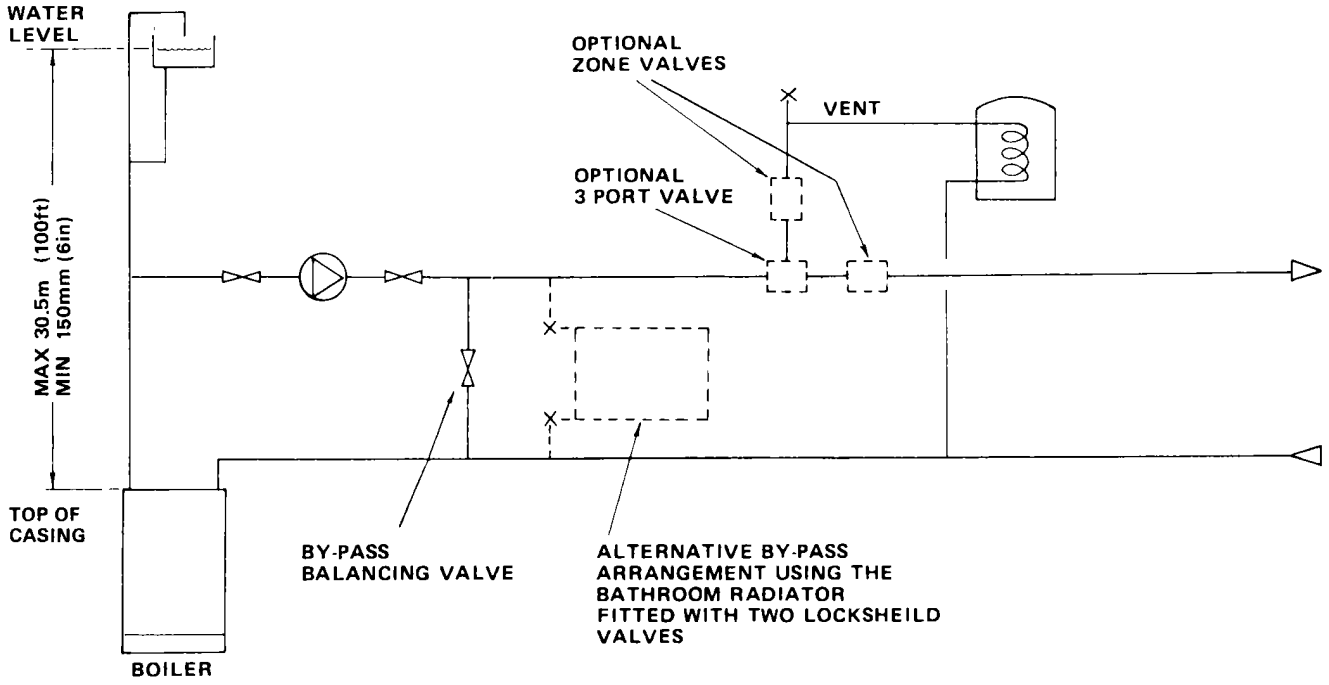

Figure 5 OPEN VENTED FULLY PUMPED SYSTEM WITH A COMBINED FEED AND VENT

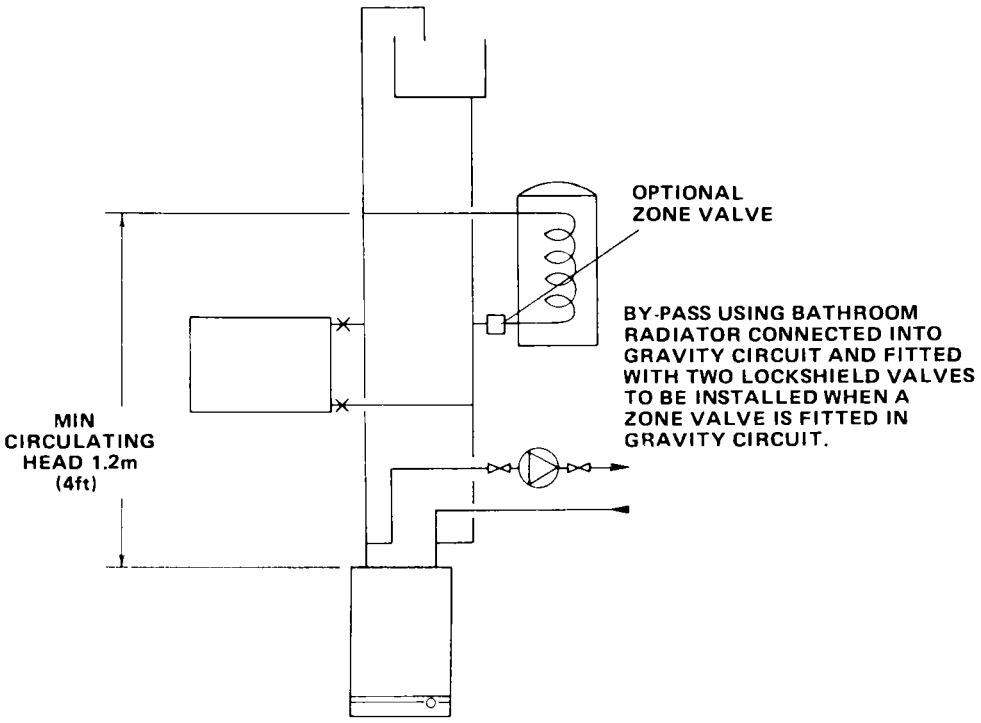

Figure 6 OPEN VENTED GRAVITY DOMESTIC HOT WATER PUMPED CENTRAL HEATING

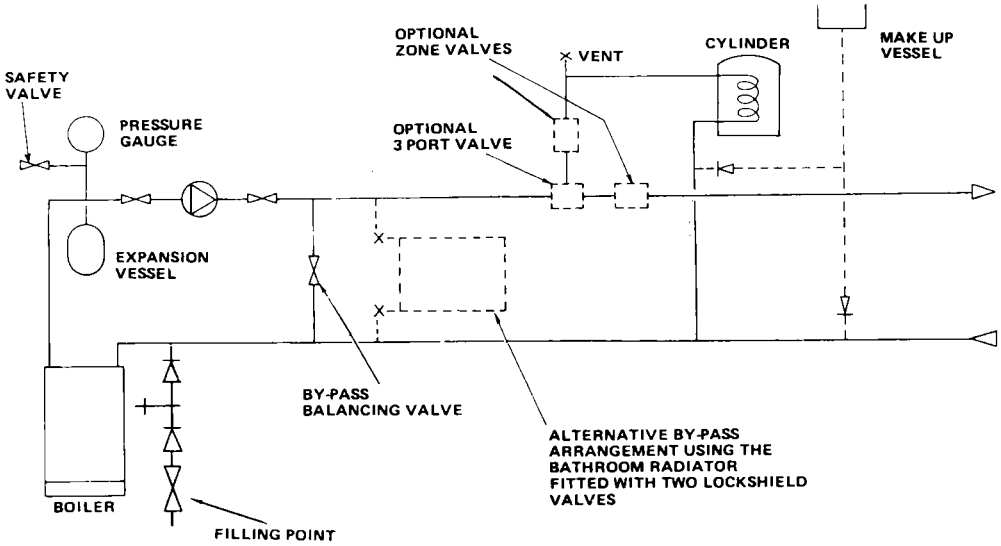

Two methods of filling a sealed water system

METHOD 1
MAINS TOPPING-UP METHOD

NOTE: This method of filling a sealed system may only be used if acceptable to the Local Water Undertaking

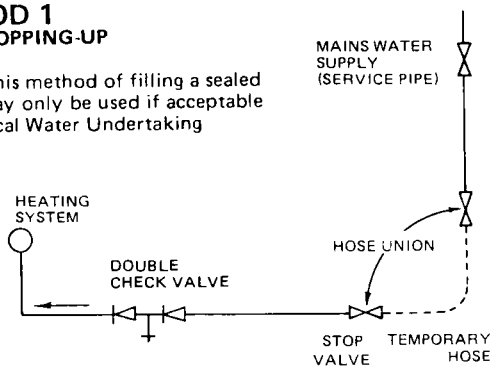

METHOD 2
CISTERN FILLING METHOD

NOTE: Cistern to be supplied through a temporary connection from a service pipe or cold water distributing pipe

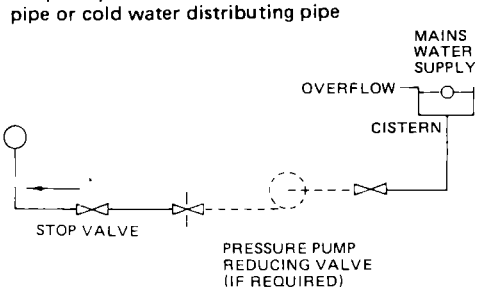

Figure 7 FULLY PUMPED SEALED SYSTEM

It is the law that all gas appliances are installed and serviced by competent persons as stated in the Gas Safety (Installation and Use) Regulations 1994.

Electrical installation and servicing should be carried out by a competent person in accordance with the I.E.E. Wiring Regulations.

For Health and Safety information see back page.

The boiler and its associated equipment will arrive on site in two cardboard cartons. The contents of each carton is as follows:-

CARTON 1
Boiler
Template
Side Infill Panels (2 off)
Literature Pack containing:
Installation & Servicing Instructions
Users Instructions
Control System Pipework and Wiring Guide Auxilliary Pack containing
Gas Service Cock
Accessory Packs
Adjustment screws

CARTON 2
Inner Flue Product Tube
Outer Flue Product Tube
Air Box
Air Tube
Terminal
Boiler Mounting Plate

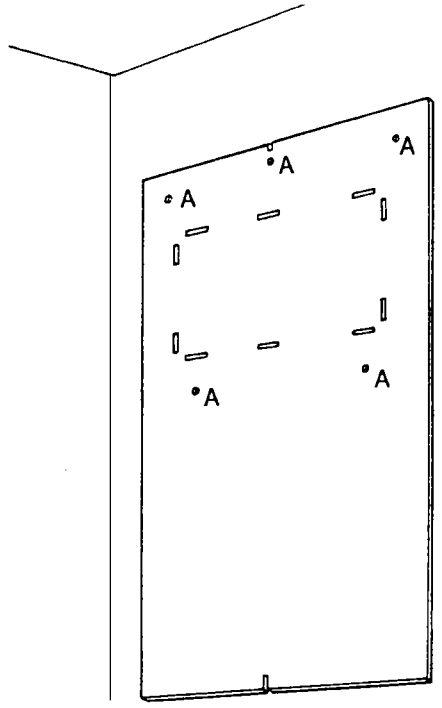

Figure 8 TEMPLATE

Place template in proposed boiler position, (the minimum side clearances are automatically allowed for).Refer to page 5 for top and bottom clearances which can be measured from template. Ensure that the template is level, mark hole positions ‘A’ and large flue outlet hole. Remove template and carefully cut flue outlet hole through wall.
DrilI holes ‘A’ to a depth of 50mm using a 7mm drill.

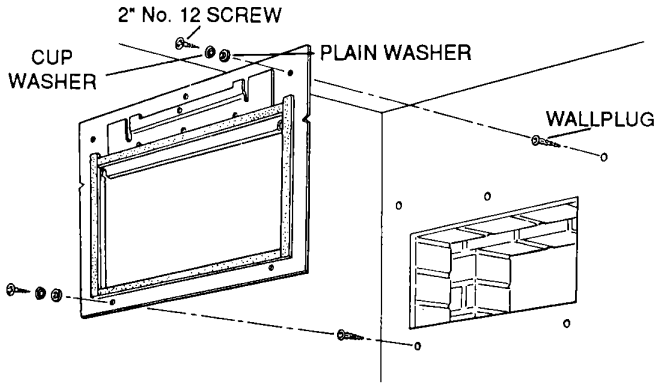

Figure 9 SECURING BOILER MOUNTING PLATE

Using wall plugs, screws and washers (accessory pack A) attach boiler mounting plate to wall. Ensure that it is level and the correct way round, i.e. flange on plate entering hole in wall.

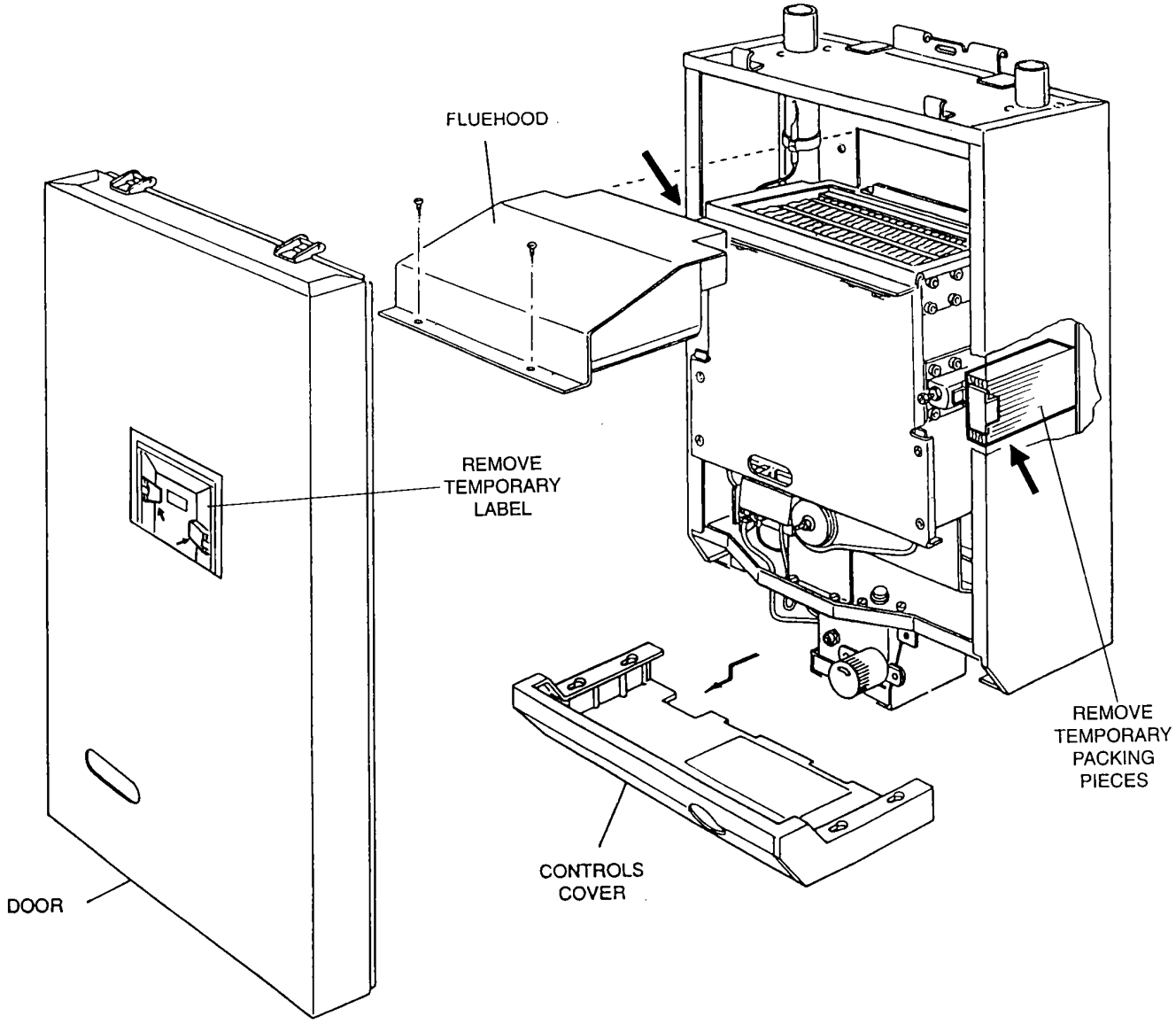

Figure 10 PREPARING BOILER

The controls cover should have been removed when unpacking the boiler, if not pull controls cover forward 25mm, lower to release from the four side fixings and pull forward clear of the thermostat knob.

Remove door by undoing the two lower fixing screws and lift door off the two upper hinge brackets.

Remove two screws securing the fluehood and remove fluehood by sliding forward to disengage it from rear location

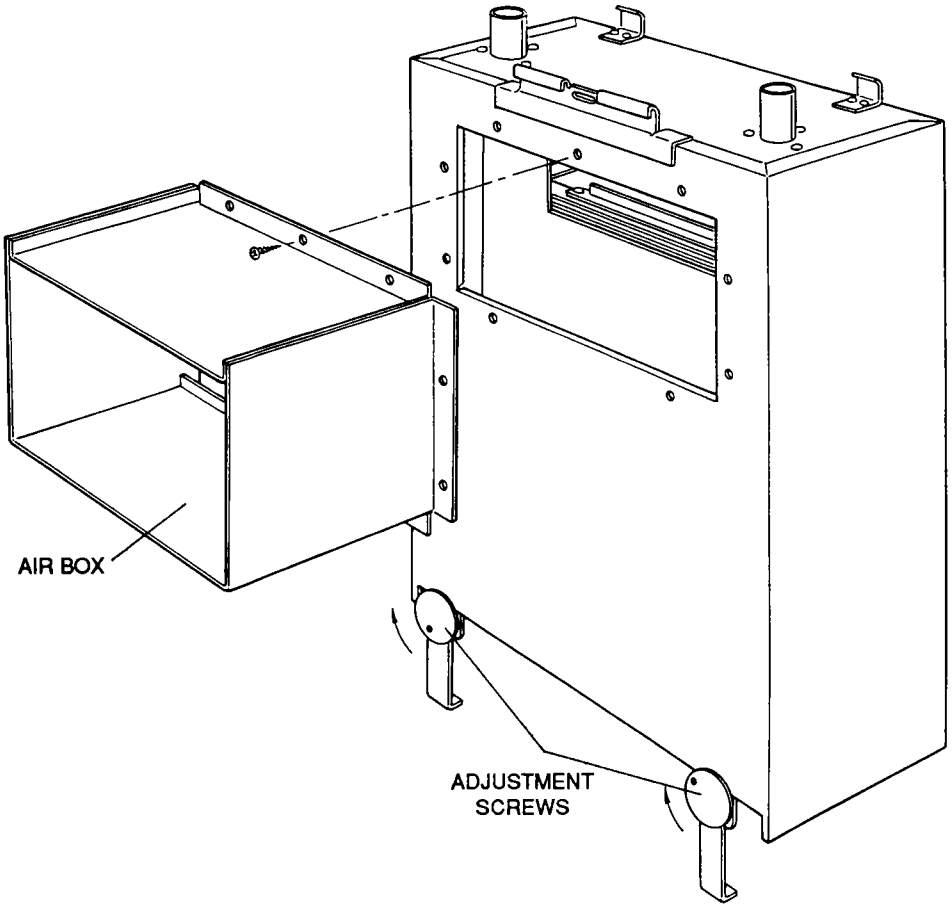

Figure 11 ATTACHING AIR BOX

The flue system provided with the boiler is telescopic and can be adjusted to suit wall thicknesses of 230mm-380mm (9in-l5in). Wall thicknesses down to 76mm (3 in)are catered for by shortening the Air Box, Inner Flue Product Tube (see Figs 11 & 14), the Air Tube and Outer Flue Product Tube (see Figs 13 & 15). Each tube is to be shortened at its plain end by the amount shown in the following table.

For wall thicknesses between 100mm-175mm (4in-7in), the alternative telescopic Flue Kit can be used for additional convenience.
Using the packaging material to protect the boiler from damage, lay the boiler on its side and secure the Air Box to the boiler using the nine M4 screws from accessory pack B. Engage adjustment screws into the boiler legs but do not screw in fully at this stage.

WALL THICKNESS	AIR BOX AIR TUBE INNER FLUE PRODUCT TUBE	OUTER FLUE PRODUOTTUBE
76mm (3m)	150mm (5.9in)	70mm (2.8in)
102mm (4in)	137mm (5.4in)	45mm (1.8in)
127mm (5in)	124mm (4.9in)	20mm (0.8in)
152mm(6in)	111mm(4.4in)	0 0
178mm (7in)	98mm (3.9in)	0 0
203mm (8in)	85mm (3.4in)	0 0

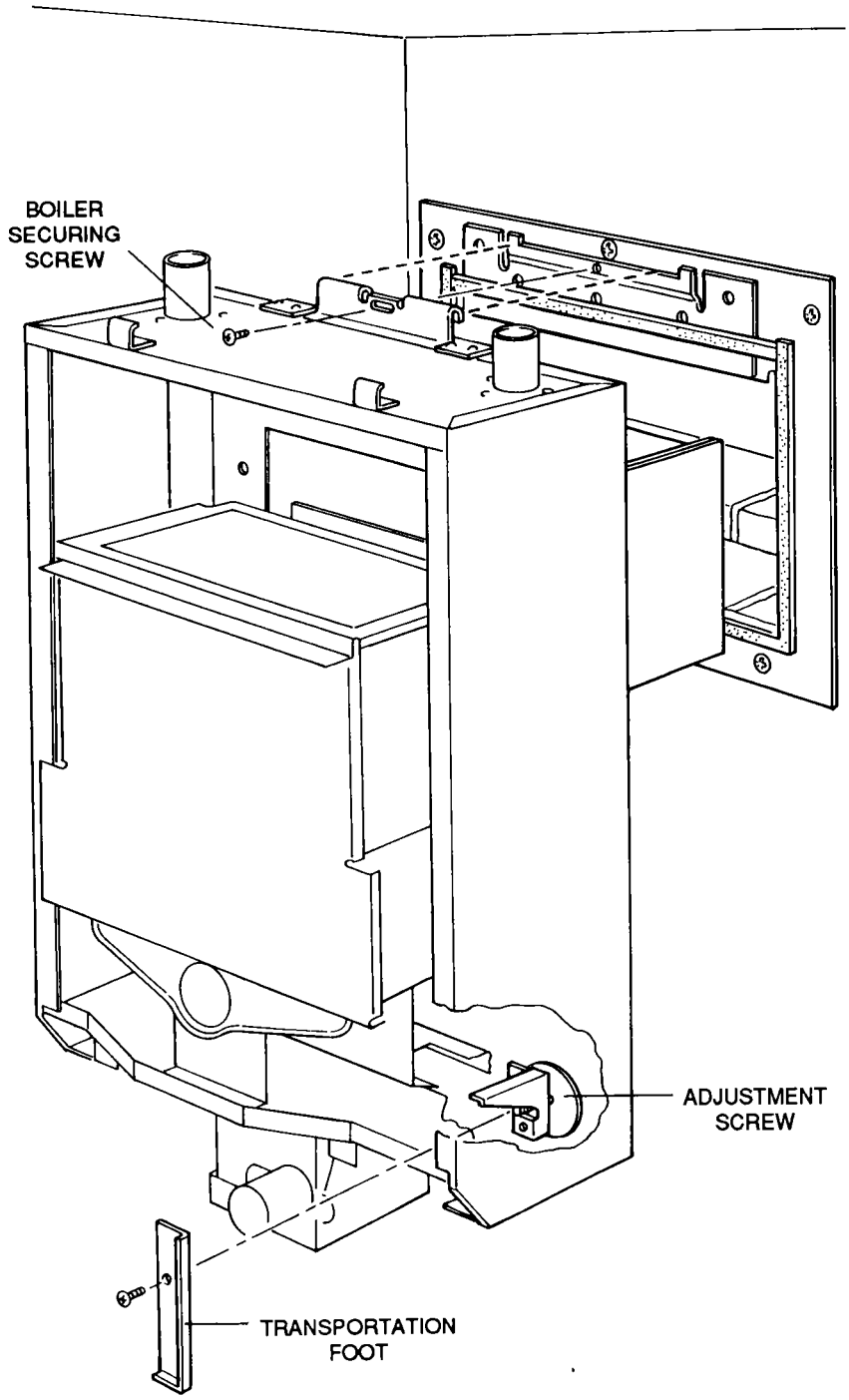

Figure 12 LIFTING AND ALIGNING BOILER

Lift boiler onto the mounting bracket and adjust the boiler position to obtain a minimum of 5mm clearance from any side wall or cupboard.

Secure boiler to the mounting bracket using 5mm screw from accessory pack C.

Undo the screws securing the transportation feet. Discard feet and screws.

Correct vertical alignment with rear wall as necessary using the adjustment screws.

Remove the temporary cardboard packing pieces from either side of the casing.

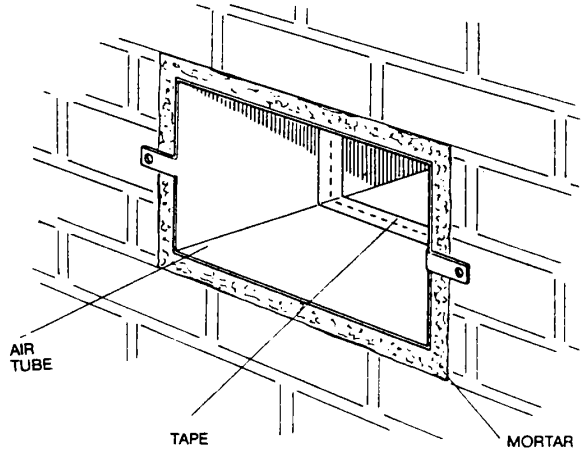

Figure 13 SEALING AIR TUBE TO AIR BOX

Working from outside the building, slide the plain end of the Air Tube into Air Box leaving the tabs on the Air Tube flush with outside wall face. Using the adhesive tape from accessory pack D seal joint between Air Tube and Air Box. Make good outside wall surface.

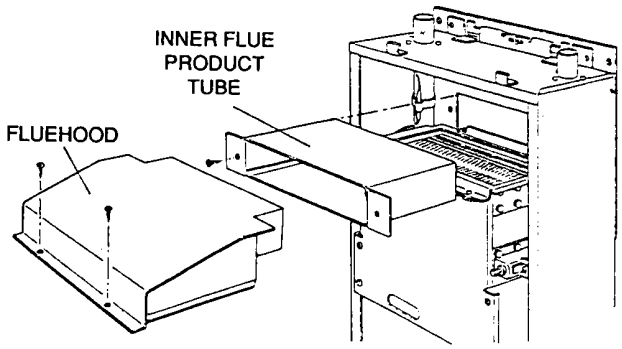

Figure 14 ASSEMBLING INNER FLUE PRODUCT TUBE AND FLUEHOOD

Pass Inner Flue Product Tube through hole in rear of boiler and secure using two 5mm screws from accessory pack C. Refit fluehood.

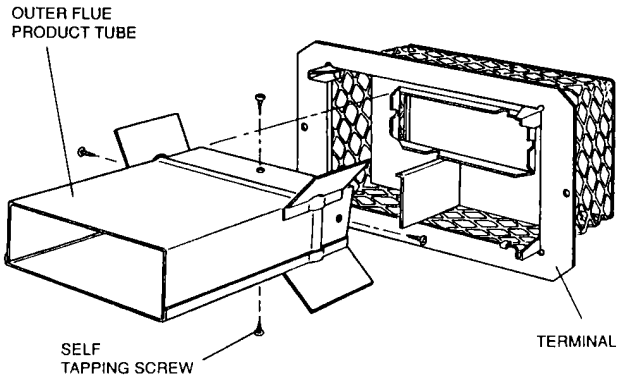

Figure 15 ASSEMBLING TERMINAL

Engage the four self-tapping screws from accessory pack E into the pre-drilled holes in the end of the Outer Flue Product Tube as illustrated but do not fully tighten.
NOTE: these screw positions are not symmetrical to ensure correct assembly with the Terminal.
Slide Terminal on to the Outer Flue Product Tube, engaging fully, the slots in the Terminal under the heads of the four screws in the Outer Flue Product Tube. Secure terminal by tightening the four screws.

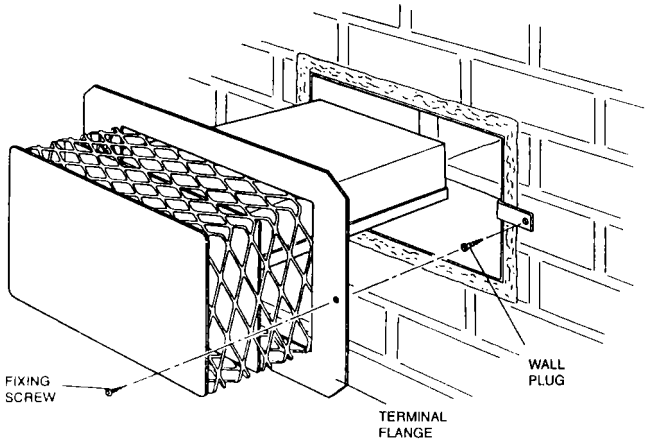

Figure 16 SECURING TERMINAL

Slide the Terminal Assembly into the Air Duct engaging the Outer Flue Product Tube over the Inner Flue Product Tube. Push Terminal back until the Terminal flange touches the wall. Mark the position of the two Terminal fixing holes (which also pass through the holes in the Air Tube Tabs) on the wall.
Temporarily remove Terminal assembly. Drill Terminal fixing holes using a 5mm drill and insert wall plugs from accessory pack F into holes.
Refit Terminal assembly and secure using two screws from accessory pack F. Centrally fit Terminal Guard over Terminal if applicable using suitable screws and wall plugs.

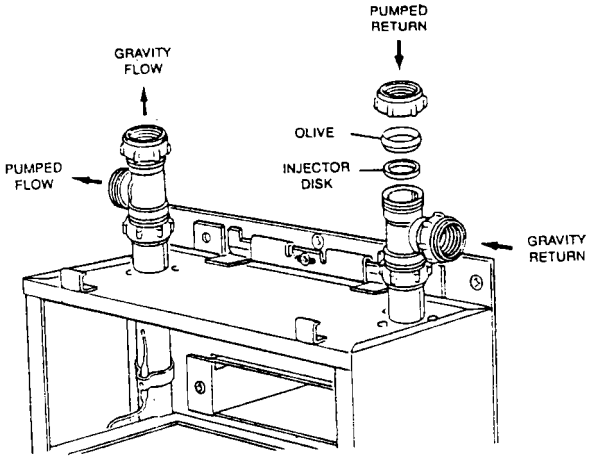

Figure 17 PIPE CONNECTIONS

Connect the system pipework to the boiler, compression fittings are recommended. If however, capillary fittings are used, it is essential to temporarily remove the thermostat bulb from the flow pipe before soldering.
A drain off tap should be installed close to the boiler if it is in a low point of the system.
On combined gravity hot water/pumped central heating installations the flow and return pipes for both the gravity hot water circuit and pumped central heating circuits must be connected to tees fitted directly to the flow and return pipes on the boiler.
The gravity circuit should be installed in 28mm copper pipe. 28mm tees should be used.

The injector disc (accessory pack G) must be positioned in the pumped return branch of the tee as illustrated in Figs 17 & 17B.

Remove gas service cock from the auxilliary pack and attach it to the union nut on the inlet to the gas assembly. With the inlet connection of the gas service cock facing to the rear, connect the gas supply pipe.

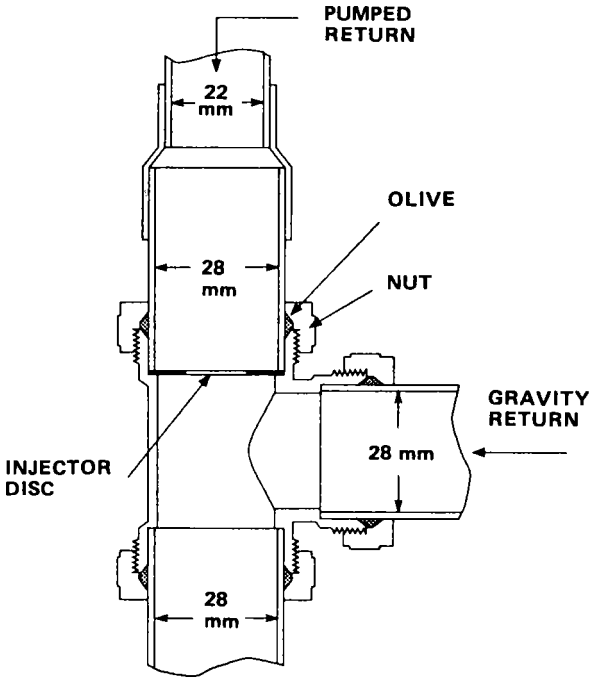

Figure 17B **WARNING:** UNDER NO CIRCUMSTANCES SHOULD A 'REDUCING SET' BE FITTED

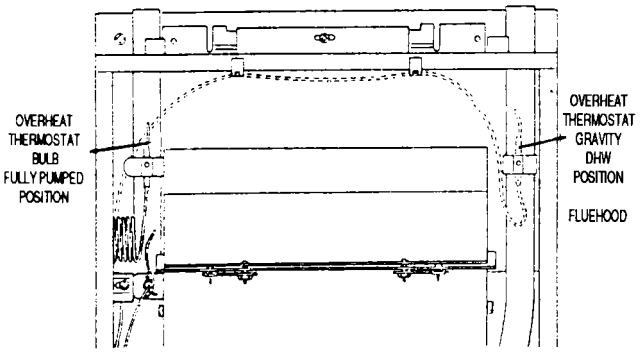

Figure 18

NOTE
The boiler is despatched with the overheat thermostat bulb positioned for FULLY
PUMPED OPEN VENTED OR SEALED SYSTEMS.
ONLY if the boiler is to be used on a GRAVITY DHW system should the bulb of the overheat thermostat be repositioned as described below, to prevent nuisance operation of the overheat thermostat.
Remove clip securing overheat thermostat bulb to the flow pipe.
Uncoil the thermostat capillary and route it through the two retaining clips attached to the front flange on the top panel.
Position the thermostat bulb in the indent in the return pipe and secure in this position using the clip previously removed.

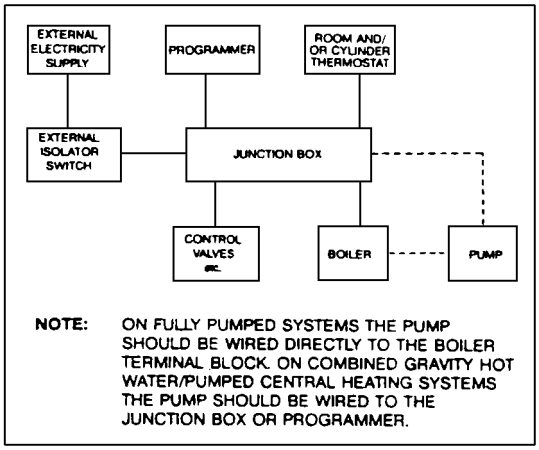

Figure 19 PRINCIPAL OF WIRING

WIRING

WARNING: This appliance must be earthed.

The boiler and all external control circuit wiring must be supplied from the same single isolating switch and should be fused at 3A.

Care must be taken to ensure that all wiring to the boiler is kept clear of sharp edges and hot surfaces.

Ensure that the earth conductor is longer than the L, N, and SWL from the point of anchorage, so that the current carrying conductors become taut before the earth conductor, if the cable is pulled out of the cable clamp.

The boiler terminal block which is situated in the control box is not designed to accept wiring from all the on site controls and therefore the installer will usually need to incorporate a suitable junction box or Potterton electronic Programmer.

The principle of wiring is shown in Fig 19. It should be noted that the pump must be wired directly to the boiler terminal block on FULLY PUMPED systems and to the junction box or programmer on combined GRAVITY HOT WATER/PUMPED CENTRAL HEATING systems.

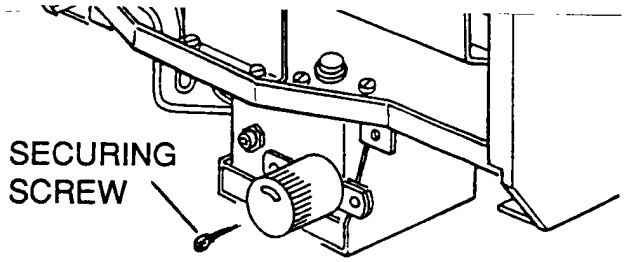

Figure 20 ACCESS TO THE BOILER ELECTRICAL TERMINAL BLOCK

Remove control box securing screw and lower the control box to gain access to the boiler terminal block.

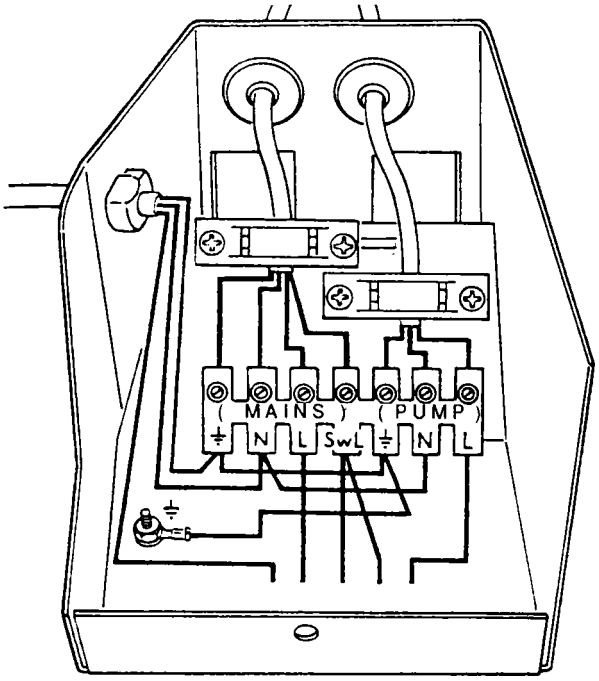

Figure 21 WIRING THE BOILER FOR A FULLY PUMPED SYSTEM

Route a four core cable through the plastic bush at the rear of the control box and the cable clamp as illustrated Fig 21, and connect it to the boiler input terminals as follows:-

Permanent live to terminal marked MAINS ‘L’

Neutral to terminal marked MAINS ‘N’ Earth to terminal marked MAINS ⏚

Switched live from external controls to terminal marked MAINS SwL.

If there are no secondary controls fitted connect the SwL terminal to permanent live in the external junction box.

Secure the cable within the cable clamp by tightening the securing screws.

Following the pump manufacturers instructions connect the pump supply wires to terminals marked PUMP, L, N and ⏚ on the boiler terminal block.

Route the cable through the plastic bush in the rear of the control box and cable clamp as illustrated Fig 21. Secure cable in cable clamp by tightening the two securing screws.

Close control box and replace securing screw.

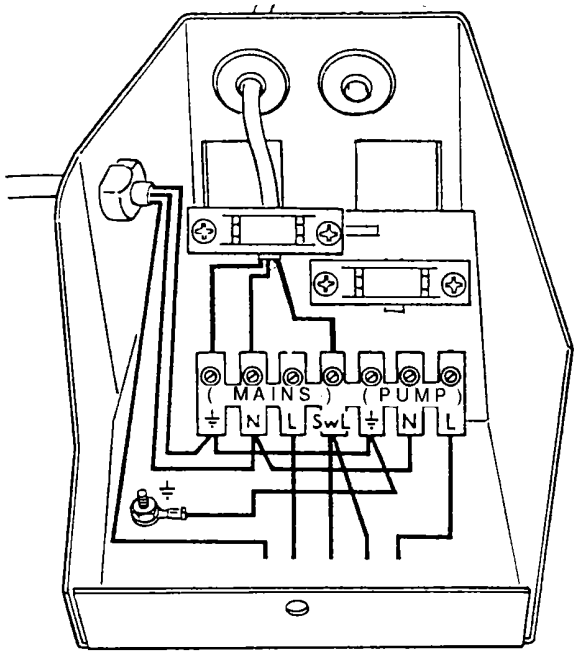

Figure 22 WIRING THE BOILER FOR COMBINED GRAVITY HOTWATER/PUMPED CENTRAL HEATING SYSTEM

Route a three core cable through the plastic bush in the rear of the control box and the cable clamp as illustrated in Fig 22. Connect the cable to the boiler input terminals as follows:-
Switched live on the GRAVITY DHW control circuit to terminal marked MAINS 'SwL' Neutral to terminal marked MAINS 'N' Earth to terminal marked MAINS ⏚

Secure the cable within the clamp by tightening the two securing screws.

The pump should be connected to PUMPED CENTRAL HEATING control circuit at the junction box. See Fig 19.

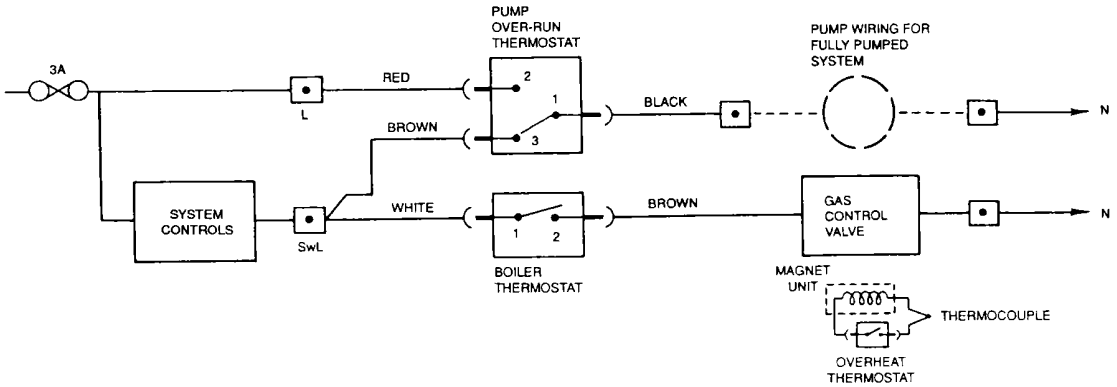

Figure 23 FUNCTIONAL FLOW DIAGRAM

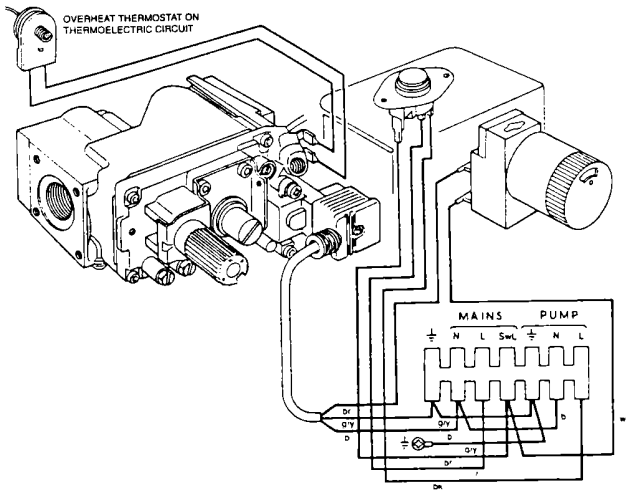

Figure 24 BOILER WIRING DIAGRAM

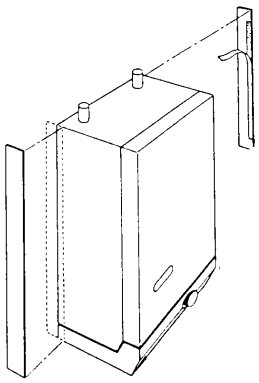

Figure 24A FITTING SIDE INFILL PANELS

If required, the gap between the casing sides and rear wall can be closed off using the infill panels supplied.

Ensure the casing surface is FULLY CLEAN AND DRY. Remove the protective backing paper from the adhesive strip on the infill panel, carefully align and press into place, applying FIRM EVEN pressure down the FULL LENGTH of contact area between panel and case. If conditions are near freezing, the boiler case should be warmed prior to application of the infill panel.

Open Vented Systems
Remove the pump and flush out the system thoroughly with cold water. Refit the pump, fill and vent the system and examine for leaks.

Sealed Systems
The system can be filled using a sealed system filler pump with a break tank or by any other method approved by the local Water Authority. Refer to FIG 7 and BS6798 1987. Remove pump and flush out the system thoroughly cold water. Re-fit the pump. Fill and vent the system until the pressure gauge registers 1 .5 bar (22.Slbf/in^2), examine for leaks. Raise the pressure until the safety valve lifts. This should occur within ±0.3 bar of the pre-set lift pressure of 3 bar. Release water to attain the correct cold fill pressure.

All Systems
The whole of the gas installation including the meter should be inspected and tested for soundness and purged in accordance with the recommendations of BS6891.
Fit the case door into position by lifting it onto the top hinge brackets and secure it with the lower two fixi'ng screws.

First Lighting
WARNING: Before lighting the boiler, ensure that the CASE DOOR HAS BEEN CORRECTLY FITTED and that the sealing strip fitted to the case door is forming a tight seal with the main boiler casing.

A. Ensure that the pump and radiator isolating valves are open.
B. Turn the boiler thermostat to the 'O' position.
C. Turn on the main gas supply and the gas service cock on boiler.
D. Ensure that the time control, if fitted is in an 'ON' condition, and that the room and/or cylinder thermostats, where fitted are set to high temperatures.
E. Switch on the external electricity supply to the boiler. In the event of an electrical fault after installation of the appliance, preliminary electrical system checks must be carried out as described in the BG multimeter instruction book. The checks to be carried out are: A - Earth Continuity, B - Short Circuit, C - Polarity, D - Resistance to Earth.
F. Partly depress and turn the gas control knob clockwise ensuring the symbol ● lines up with the datum mark on the gas valve body. See Fig 25. This ensures that the valve is in the 'OFF' condition.
G. Partly depress and turn the control knob anti-clockwise until the symbol * lines up with the datum mark on the gas valve body. Press and hold in the control knob and press the spark generator button until a click is heard. Release the spark generator button and repeat operation until the pilot ignites. See Figs 2 & 25.
Hold in the control knob for a further 15 seconds. On release the pilot should remain alight.
Partly depress and turn the control knob anti-clockwise until the symbol lines up with the datum mark on the gas valve body.

NOTE:
On first lighting, establishment of the pilot flame may be slightly delayed due to the presence of air in the pipework. If the pilot fails to light or goes out at any time, immediately turn the control knob clockwise as far as possible, then release it and wait three minutes before repeating the lighting procedure. The control knob should not be touched during this period.

H. Turn the boiler thermostat on and to a high setting and the main burner will light.
I. Set the boiler thermostat and the room and/or cylinder thermostat(s) and time control, where fitted, to their required operating conditions.
J. Check soundness of all appliance gas carrying components and joints using leak detection fluid and a mirror where necessary.
K. Switch off the boiler, using the thermostat knob.

FINAL ADJUSTMENT

A. Remove the screw from the burner pressure test nipple on the gas control valve and fit a pressure gauge to the test nipple.
See Fig 25.
B. Turn on the boiler thermostat, then check that the pressure is in accordance with the values stated under TECHNICAL DATA. The burner pressure is factory set to the maximum stated.
C. If burner pressure adjustment is necessary, remove the screwed cap from the gas control valve, see Fig 25 , and turn the screw beneath clockwise to increase pressure and anti-clockwise to reduce pressure.
D. With the burner set to its correct pressure, the firing rate given in TECHNICAL DATA should also be obtained and this should be checked by meter reading 10 minutes after the main burner has been lit.
E. Shut down the boiler, remove the pressure

gauge. Replace the screwed cap and refit the screw in the test nipple. Re-light and test for gas soundness at the test nipple screw.

F Remove the self-adhesive arrow from the inspection ticket tied to the burner supply pipe and stick it to the data plate inside the controls cover to indicate the appropriate burner pressure. Refit the controls cover.

G. Heat the system to maximum. Check for water leaks, turn the boiler off, drain the system whilst hot.

H. Refill the system and on sealed systems adjust to the correct cold fill pressure. Set the pressure gauge pointer to the system design pressure.

I. If a by-pass circuit is fitted, the by-pass valve should be adjusted with the boiler operating under minimum load conditions to maintain sufficient water flow through the boiler to ensure that the overheat thermostat does not operate under normal operating conditions.

J. Remove the temporary label from the front of the casing, having checked compli with the information it contains.

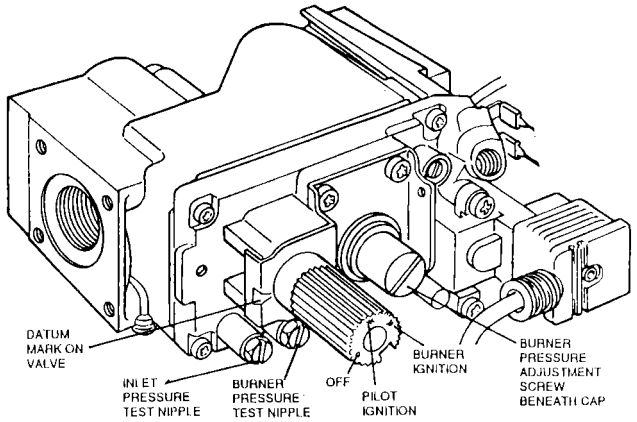

Figure 25 GAS CONTROL VALVE

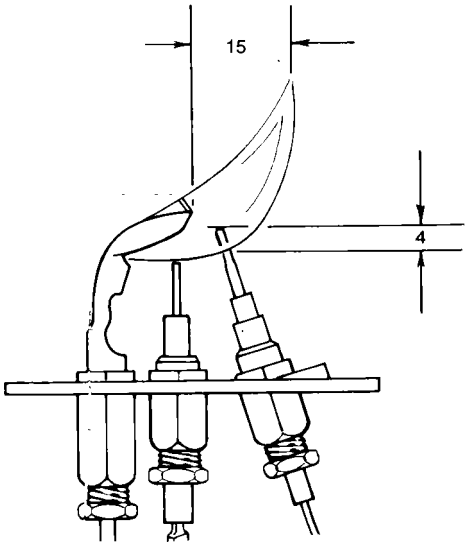

Figure 26 PILOT BURNER

Pilot Burner
The pilot burner pressure is non-adjustable. The pilot flame should heat the thermocouple so that the pilot safety device is “held in” but must not cause the thermocouple to glow bright red. Fig 26 illustrates the approximate size of a correct flame. The E.M.F. generated by the thermocouple should be of the order of 20-30 mV open circuit, 10-14 my closed circuit. Due to the voltage drop in the overheat thermostat circuit there should be 6.5-8.5 mV closed circuit at the connection to the gas control valve. Drop out should occur between 1-3 mV closed circuit. If these conditions cannot be achieved check that the inlet pressure is 20 mbar See Fig 25 for inlet test nipple position. If this is correct contact Potterton Myson.

Boiler Thermostat
At its minimum and maximum settings, the thermostat should control the water flow temperature at approximately 55^0C-82^0C (1 30^0F -1 80^0F). The thermostat has been calibrated by the makers and no attempt should be made to re-calibrate it on site. Turn the thermostat to the O position and check that the main burner shuts down.

Pump Over-run Thermostat (Applicable on fully pumped systems only)
The over-run thermostat will keep the pump running when the boiler has shut down, as long as the combustion chamber is hot.

Overheat Thermostat
The overheat thermostat is pre-set and no adjustment is possible. It will require manual resetting and the pilot re-lighting if an overheat condition occurs. The re-set button can be found on the front of the controls box. See Fig 2.

Gas Control Valve
1) Main Solenoid
Check the operation of the valve by turning off the electricity supply, either by the isolating switch or time control, where installed. The main burner must shut down immediately.
2) Flame Failure Valve
Turn the gas control knob to the ‘off’ position. The pilot must shut down, and a “click” indicating thermocouple drop out, should be heard within 60 seconds.

External Controls
Check that any other external controls connected in the system such as time clocks and thermostats, control the boiler as required.

User’s Instructions
A Users Instructions leaflet is provided with this boiler but the householder must have the operation of the boiler and system explained by the Installer. The householder must also be advised of the importance of annual servicing and of the precautions necessary to prevent damage to the system and building, in the event of the system remaining out of commission in frost conditions.

Regular skilled servicing and cleaning of the appliance is essential to ensure continued safe and efficient operation. The frequency of cleaning will depend upon the particular installation conditions, and the use to which the appliance is put, but in general, once per year should be adequate. It is the law that all gas appliances are installed and serviced by competent persons as stated in Gas Safety (Installation and Use) Regulations
1994.

Electrical installation and servicing should be carried out by a competent person in accordance with the I.E.E. Wiring Regulations

For Health and Safety Information see back page. Servicing is best arranged by a contract placed with Potterton Myson Limited and further details are available from the local Potterton Myson Service Department.

The boiler DATA PLATE and WIRING DIAGRAM are attached to the inside of the plastic controls cover. The boiler CODE NUMBER which should be quoted when ordering spares or requesting information is on the front of the control box.

The following notes apply to the boiler and its controls but it should be remembered that attention must also be paid to the heating circuit itself including radiator valves, thermostats, the time control and the expansion and feed water system. It is advisable to clean the boiler immediately after the end of the heating season.

In all cases prior to servicing, light up the boiler and check that the pilot and main burners have a clean, even flame and that the gas rate and main burner pressure is correctly set.

Before the start of any servicing work, switch off at the external electricity supply by disconnecting the plug at the socket or switching off external isolating switch. Turn off the gas service cock.

NOTE:
After completing any servicing or replacement of components check for gas soundness and carry out functional checks.

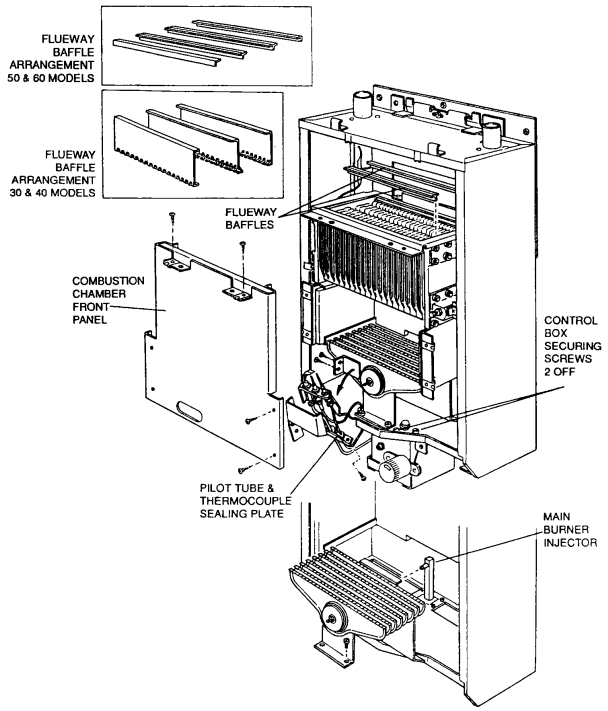

Figure 27 PREPARING THE BOILER FOR SERVICING

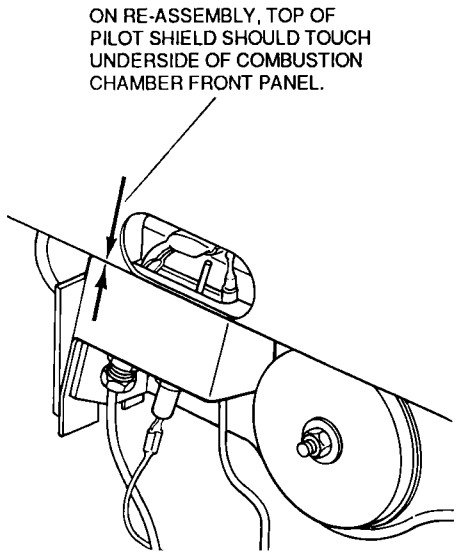

Figure 27A PILOT SHIELD

1. **PREPARING THE BOILER FOR SERVICING**
See Fig 27

A. Switch off the external electricity supply by disconnecting the plug at the socket or switching off external isolating switch.
B. Remove controls cover by pulling it forward 25mm, lower it to release it from its four side fixings and pull forward clear of the thermostat knob. Lift off the optional pump cover if fitted.
C. Turn off the gas service cock.
D. Remove door by unscrewing lower fixing screws and lift door off the two upper hinge brackets.
E. Remove two screws securing the fluehood and remove fluehood by sliding forward to disengage it from rear location.
F. Lift out baffles from flueways, there are 3 baffles in 30 & 40 models and 4 baffles in 50 & 60 models.
G. Remove six screws securing the combustion chamber front panel and remove panel.

NOTE
It is important that the front baffle is removed before removing this panel as the baffle will fall out and possibly damage a work surface etc.

2. **MAIN BURNER REMOVAL AND CLEANING**

A. Remove two screws securing pilot tube and thermocouple sealing plate to boiler base.
B. Remove two screws securing pilot to burner. Flex pilot assembly forward and down.
C. Remove two screws securing main burner to boiler base.
D. Slide main burner forward to disengage it from the rear injector and lift out main burner.
E. Clean all deposits from the surface of the burner flame strip with soft brush or vacuum cleaner and ensure there is no fluff in the entry of the burner venturi.
F. Remove main burner injector and ensure the orifice is clean.
G. PILOT BURNER
The following operations are only necessary if the pilot flame is distorted or the wrong size, i.e. too small. Disconnect the electrode lead from the electrode, uncouple the thermocouple and pilot gas tube nuts at the base of the pilot assembly and lift out the pilot. Note, the pilot injector sits loosely on top of the pilot tube, or may be retained in pilot head itself. Remove and inspect the pilot injector for dirt deposits and clean if necessary. Likewise inspect and clean the electrode and thermocouple using a soft brush.

3. **HEAT EXCHANGER**
Working from above and below the heat exchanger use a suitable brush and remove all deposits from between the fins.

4. **COMBUSTION CHAMBER INSULATION**
Check the combustion chamber insulation for damage. If damaged replace as described under replacement.

5. **REASSEMBLY**
Refit the main burner ensuring it is correctly engaged onto the rear injector. Replacement of the other components is the reverse of removal.
Ensure that the flueway baffles are refitted as illustrated in Fig 27 NOTE: The pilot shield is located between the pilot and the securing bracket, and should be pushed upwards to make contact with the underside of the combustion chamber front panel. See Figure 27A Ensure on re-assembly that the sealing plate and split grommets form a tight seal around the pilot tube and thermocouple capillary.

6. Follow the full commissioning procedure as detailed in the COMMISSIONING section of these instructions.

7. No further servicing is required on any other boiler mounted units.
Repair is by replacement.

8. **FAULT FINDING**
Refer to fault finding chart Fig 28 and wiring diagram Fig 23.

MAIN BURNER
Refer to Fig 27 and carry out the following:-
a Carry out operations A, B, C, D, E, G as described in section 1 PREPARING BOILER FOR SERVICE and operations A, B, C, D described in section 2 MAIN BURNER REMOVAL AND CLEANING.
b Replacement is the reverse of removal.

c Follow the full commissioning procedure as detailed in the COMMISSIONING section of these instructions.

GAS CONTROL VALVE

a Carry put operations A, B, C in section 1 PREPARING THE BOILER FOR SERVICE.
b Unplug the electrical lead from the gas valve.
c Disconnect the two blue wires from the thermocouple interrupter connections.
d Disconnect the thermocouple lead from the interrupter connection on the gas valve. Note the interrupter connector is held in place by the thermocouple lead.
e Disconnect the pilot tube at the gas valve.
f Undo the union at the gas service cock.
g Separate the gas control valve from the flange at the outlet port by removing the four securing screws.
h Remove the screw securing the gas valve support bracket to the boiler. Unscrew gas inlet assembly at valve and remove two M4 screws retaining valve support bracket. Fit both components to new valve.
j Replacement is the reverse of the removal. Use new sealing gasket on reassembly.
k Follow the full commissioning procedure as detailed in the COMMISSIONING section of these instructions.

PILOT FILTER

The pilot burner is protected from blockage by a pilot filter situated within the gas control valve. The filter is large and designed to last the life of the gas control valve under normal operating conditions. It is therefore unlikely to need replacing. However in the event of pilot filter blockage being suspected the complete valve will need replacing.

THERMOCOUPLE

a Carry out operations A, B, C, D in section 1 PREPARING BOILER FOR SERVICE.
b Remove two screws securing pilot tube and thermocouple sealing plate to boiler base.
c Disconnect thermocouple lead from the interrupter connection on the gas control valve and at the pilot. NOTE: The interrupter connector is held in place by the thermocouple lead. Withdraw thermocouple from grommet, noting the route the lead takes so that the replacement can be routed in a similar manner to eliminate sharp bends.
d Replacement is the reverse of removal. Ensure on reassembly that the sealing plate and split grommets form a tight seal around the pilot tube and thermocouple lead.

ELECTRODE

a Carry out operations A,B,C,D in section 1 PREPARING BOILER FOR SERVICE.
b Pull off electrode lead from electrode.
c Unscrew the nut securing the electrode to the pilot and withdraw electrode. d Replacement is the reverse of removal.

COMBUSTION CHAMBER INSULATION

a Carry out operations A,B,C,D,E,G in section 1 PREPARING BOILER FOR SERVICE. The front and side insulation panels are removed by sliding them from their retaining channels. The rear insulating panel lifts out once the side insulating panels have been removed.

SIGHT GLASS

WARNING: GREAT CARE SHOULD BE TAKEN WHEN HANDLING AND DISPOSING OF A BROKEN SIGHT GLASS.

a Carry out operations A,B,C,D in section 1 PREPARING BOILER FOR SERVICE.
b Remove three M4 nuts from sight glass retainer and remove sight glass assembly.
c Replacement is the reverse of removal taking care that the clear circle in the sight glass lines up with the hole in the combustion chamber door.

NOTE: New gaskets must be used when sight gas is fitted.

ELECTRODE LEAD

a Carry out operations A,B,C,D in section 1 PREPARING BOILER FOR SERVICE.
b Remove rear locking nut securing spark generator to its mounting bracket, withdraw spark generator and pull off electrode lead. Pull off electrode lead from electrode. Remove the split grommet and withdraw the electrode lead through the hole in the boiler base.
c Replacement is the reverse of removal.

SPARK GENERATOR

a Carry out operations A,B,C in section 1 PREPARING BOILER FOR SERVICE.
b Remove rear locking nut securing spark generator to its mounting bracket, withdraw spark generator and pull off electrode lead.
c Replacement is the reverse of removal.

PUMP OVER-RUN THERMOSTAT

a Carry out operations A,B,C,D in section 1 PREPARING BOILER FOR SERVICE.
b Remove control box securing screw and lower control box.
c Access to the pump over-run thermostat is made easier by separating the upper assembly of the control box from the boiler base. This is done by removing the two hexagonal head screws identified in Fig 27 Tilt the upper assembly and disconnect the electrical wiring from the thermostat as follows:-
    Black from terminal 1
    Red from terminal 2
    Brown from terminal 3
d Replacement is the reverse of removal.
e Follow the full commissioning instructions as described in the COMMISSIONING section of these instructions.

BOILER THERMOSTAT

a Carry out operations A,B,C,D in section 1 PREPARING BOILER FOR SERVICE.
b Remove control box securing screw and lower control box.
c Pull off the outer thermostat knob. d Remove inner thermostat post by undoing the two securing screws. e Access to the boiler thermostat is made easier by separating the upper assembly of the control box from the boiler base. This is done by removing the two hexagonal head screws identified in Fig 27 Tilt the upper assembly and disconnect the electrical connections from the rear of the thermostat as follows:-
    White from terminal 3
    Brown from terminal 2
Refer to Figs 23 & 24.
f Remove the nut securing the thermostat to the control box.
g Remove the split pin retaining the thermostat bulb and withdraw bulb from its pocket.
h Remove split grommet in the base of the boiler and the split grommet from the side of the control box, and feed thermostat capillary and bulb through holes.
i Replacement is the reverse of removal. The bulb of the new thermostat should be coated with heat conducting paste. Ensure the split grommet in the base of the boiler makes a good seal around the capillary.
j Ensure that the capillary is secure in the clips provided. Follow the full commissioning procedure as detailed in the COMMISSIONING section of these instructions.

OVERHEAT THERMOSTAT

a Carry out operations A,B,C,D in section 1 PREPARING BOILER FOR SERVICE.
b Remove control box securing screw and lower control box.
c Access to the overheat thermostat is made easier by separating the upper assembly of the control box from the boiler base. This is done by removing the two hexagonal head screws identified in Fig 27 Tilt the upper assembly and disconnect the two push-on electrical connections from the overheat thermostat terminals.
d Remove the nut securing the thermostat to the control box.
e Remove clip securing the thermostat bulb to the pipe.
f Remove split grommet in the base of the boiler and the split grommet from the side of the control box and feed thermostat capillary and bulb through holes.
g Replacement is the reverse of removal. The bulb of the new thermostat should be coated with heat conducting paste. Ensure the split grommet in the base of the boiler makes a good seal around the capillary.
h Ensure that the capillary is secure in the clips provided. Follow the full commissioning procedure as detailed in the COMMISSIONING section of these instructions.

Figure 28 **FAULT FINDING CHART**

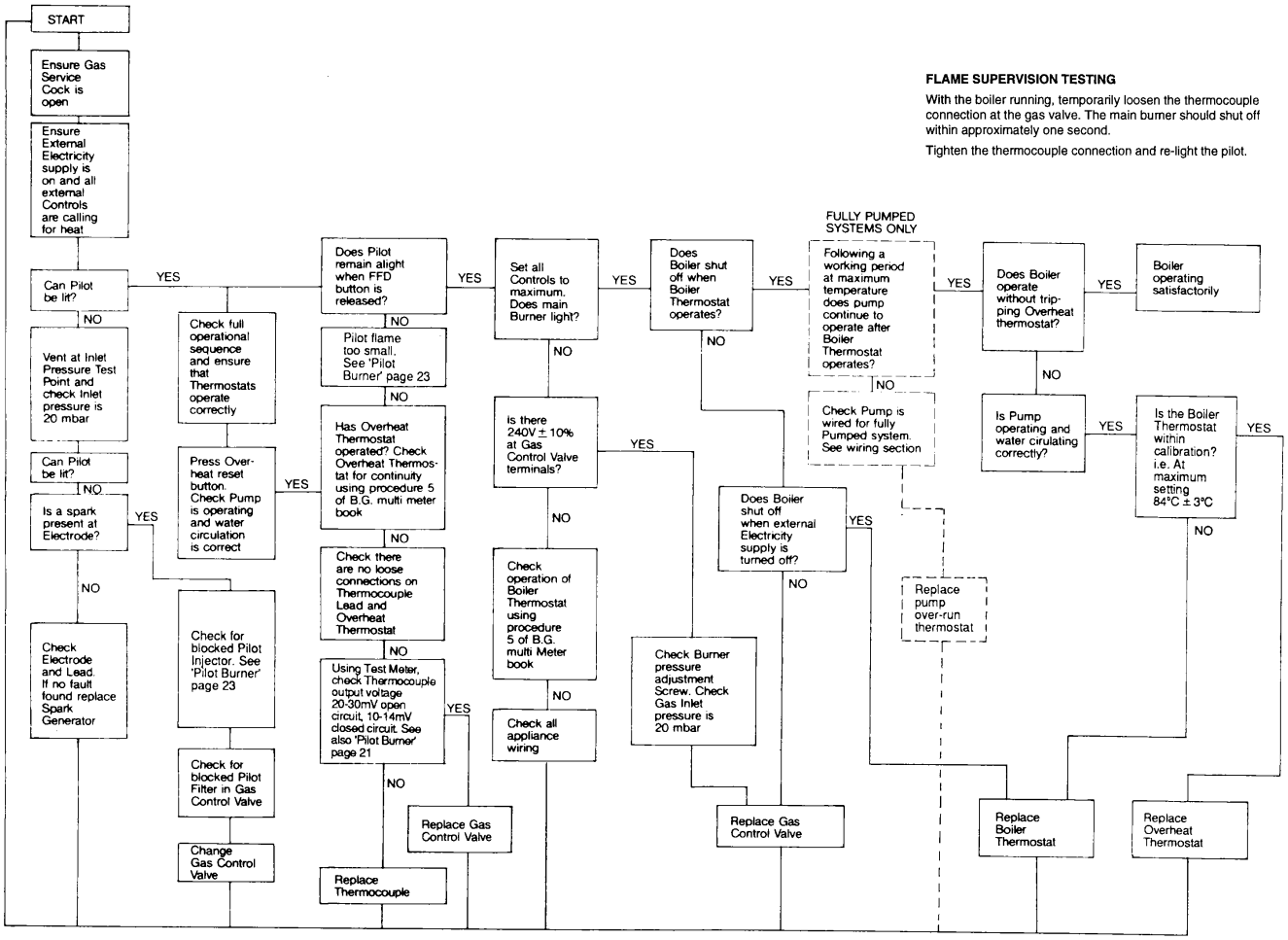

SHORT PARTS LIST

Key No		P.M. Part No.	G.C Part No.
1	Pilot and electrode assembly S.I.T. (inc. items 2 6)	907241	337 816
2	Pilot injector, 0.34mm S.I.T.	402926	381 949
3	Olive	402949	386 770
4	Tube nut	402948	386 771
5	Electrode	402885	395 720
6	Electrode securing nut	402886	336 974
7	Thermocouple, S.I.T.	402918	381 713
8	Gas Control valve, S.I.T. NOVA	402974	378 496
9	2.6mm Burner Injector 30B boiler	410989	338 516
	3.1 mm Burner Injector 40B boiler	410990	338 517
	3.5mm Burner Injector 5GB boiler	410991	338 518
	3.9mm Burner Injector 6GB boiler	410992	338 519
10	Overheat Thermostat, RANCO	404509	378501
11	Boiler Thermostat, RANCO K36	404510	378 550
12	Spark Generator VERNITRON	407693	382 887
13	Boiler Thermostat knob	225251	338 445
14	Flue Brush (optional extra)	212154	337526
15	Pump Over-run Thermostat, THERMODISC	404519	173 061
16	Electrode lead	407722	338515

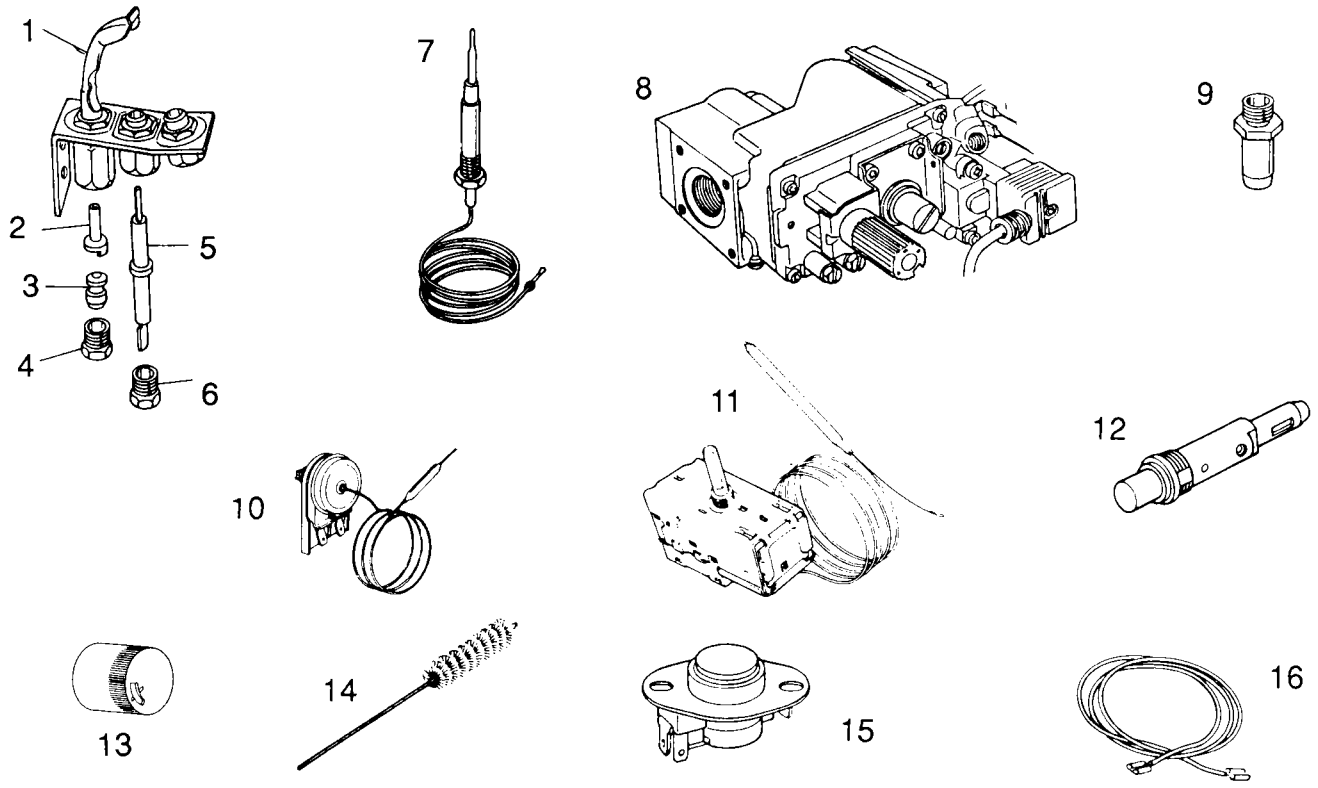

HEALTH AND SAFETY INFORMATION FOR THE INSTALLER AND SERVICE ENGINEER - Page 28

Under the Consumer Protection Act 1987 and section 6 of the Health and Safety at Work Act 1974, we are required to provide information on substances hazardous to health.
Small quantities of adhesives and sealants used in the product are cured and present no known hazards.
The following substances are also present.

Insulation & Seals

Material	-	Ceramic Fibre; Alumino Silicone Fibre
Description	-	Boards, Ropes, Gaskets
Known Hazards	-	Some people can suffer reddening and itching of the skin. Fibre entry into the eye will cause foreign body irritation. Irritation to respiratory tract.
Precautions	-	People with a history of skin complaints may be particularly susceptible to irritation. High dust levels are only likely to arise following harsh abrasion. In general, normal handling and use will not present discomfort, follow good hygiene practices, wash hands before consuming food, drinking or using the toilet.
First Aid	-	Medical attention must be sought following eye contact or prolonged reddening of the skin.

Thermostat

Material	-	Contains very small quantites of xylene
Description	-	Sealed phial and capillary containing liquid.
Known Hazards	-	Irritating to skin, eyes and throat. Vapour is harmful. Inflammable do not extinguish with water.
Precautions	-	Do not incinerate. Avoid contact with broken/leaking phials. Do not purposely puncture.
First Aid	-	Eye/skin contact, wash with clean water, seek medical attention.

Back page

POTTERTON

USER'S GUIDE

Prima 30B, 40B, 50B & 60B

USERS INSTRUCTIONS

IT IS IMPORTANT THAT THE CASE OF THIS APPLIANCE IS NOT REMOVED FOR ANY REASON OTHER THAN FOR SERVICING BY A QUALIFIED SERVICE ENGINEER. THE APPLIANCE MUST NOT BE OPERATED WITHOUT THE CASING CORRECTLY FITTED AND FORMING AN ADEQUATE SEAL.

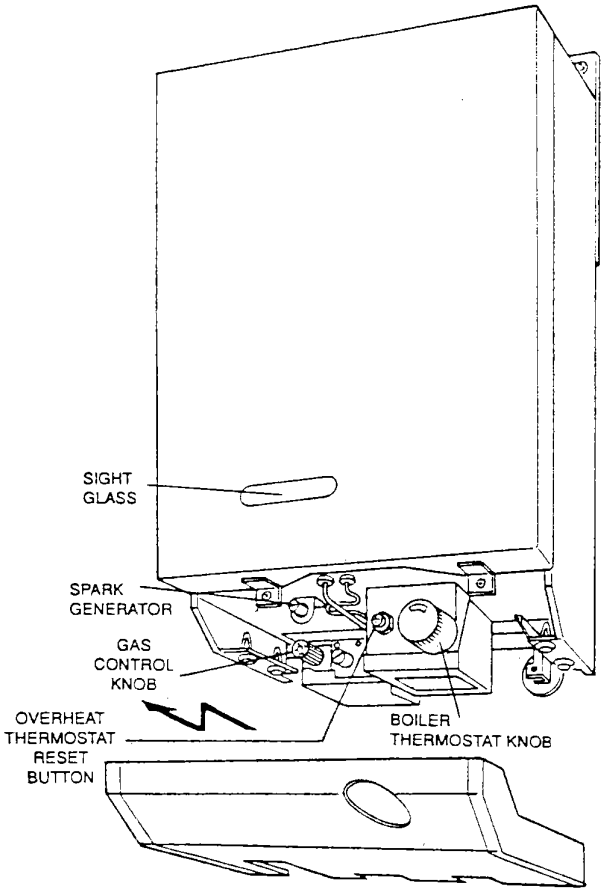

THIS APPLIANCE IS FOR USE ON NATURAL GAS ONLY.

IT MUST BE INSTALLED AND SERVICED BY A COMPETENT PERSON AS STATED IN THE GAS SAFETY (INSTALLATION AND USE) REGULATIONS 1994.

INTRODUCTION

The information given on this card will help you to obtain the maximum comfort from your boiler with the minimum trouble and cost. Once the pilot is lit your boiler is fully automatic in operation and requires very little attention apart from setting the thermostat. Regular skilled servicing is required to maintain the safe and efficient operation of your boiler throughout its long working life. Further information on this subject is given at a later stage.

ELECTRICITY SUPPLY

WARNING:THIS APPLIANCE MUST BE EARTHED

Connection shall be made to a 240V—50 Hz AC supply. The appliance must be protected by a 3 amp fuse. If a 13 amp (BS1363) plug is used or if any other type of plug is used by a 5 amp fuse in the circuit.

GAS CONTROL KNOB DETAILS

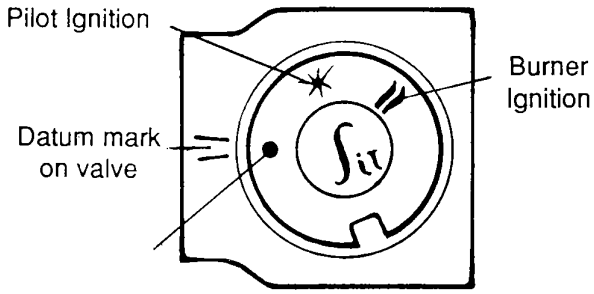

Publication No. 550523/0006

The boiler should have the following minimum clearances for Safety and Maintenance, 61 0mm (2ff) at the front of the boiler, 5mm (3/l6in) each side, 100mm (4in) at the bottom, 50mm (2in) at the top. If the appliance is installed in a compartment, do not obstruct any purpose-provided ventillation openings and do not use for storage purposes. Flammable materials must not be stored in close proximity to the boiler.
Ensure that the flue terminal outside the house does not become obstructed, particularly by foliage.

THE BOILER THERMOSTAT

The boiler thermostat enables you to control the temperature of the water as it leaves the boiler and it is also used for turning the boiler on and off. The thermostat knob can be set to O (OFF), Min, 1,2,3,4,5 or Max. The graduations Min to Max. correspond approximately to a temperature range of 55ºC to 82ºC (130ºF - 180ºF).
During the summer months, when the boiler is only being used to supply stored domestic hot water and there is no independent hot water temperature control, the thermostat can be set to position 1 or 2 which will probably be hot enough for bathing or washing up requirements. For washing clothes, a higher setting may be necessary.

In winter weather, when central heating is required, the thermostat knob can be turned up higher but it must be remembered that unless the temperature of the water in the domestic hot water cylinder is independently controlled, the stored hot water could be at a temperature that could scald, i.e. about 82ºC (1 80ºF).

OTHER CONTROLS

A Potterton Electronic Programmer or other type of clock may have been fitted in your system, together with room and/or cylinder thermostats. Full instructions on the use of these controls should be supplied with them.

LIGHTING THE BOILER

1. Remove controls cover. This is done by pulling it forward by 25mm, lowering by 10mm to release from side fixings and lifting clear of the thermostat knob. See illustration on page 1.
2. Switch ON' the main electricity supply and ensure that the boiler thermostat knob is in the 'O' position.
3. Ensure the electronic programmer or other time control, if fitted is in an 'ON' period (refer to time control literature).
4. Ensure that any room or cylinder thermostats are at a high temperature setting.
5. Partly depress and turn the gas control knob clockwise as far as possible to position ● (see knob details). This ensures the valve is in the 'OFF' condition.
6. Partly depress and turn the control knob anti-clockwise to the pilot ignition position (see knob details) and hold it whilst pressing and releasing the spark generator button several times. Continue to hold in the gas control knob, look through the pilot sight glass and check that the use the pilot may take several attempts to light). When lit, continue to hold inthe gas control knob for about 15 seconds, release knob and the pilot should remain alight. Partly depress and turn the gas contol knob to the burner ignition symbol (see knob details).
   NOTE:
   If the pilot fails to light or goes out at any time, partly depress and turn the control knob clockwise to the 'OFF' position, release and WAIT THREE MINUTES before attempting to relight. (If the pilot goes out having released the knob during the lighting procedure, hold in the knob for a little longer after lighting the pilot on the re-light attempt).
7. Turn the boiler thermostat knob clockwise to a high setting and the main boiler will light.
8. Set the boiler thermostat and the room and/or cylinder thermostat(s) and any time control, to their required operating conditions. Refit controls cover.
   NOTE: When the boiler is first lit, there may be a slight smell. This will disappear with use.

TO SHUT THE BOILER OFF

Short periods : Switch off the time control. Where no time contol is fitted, turn the boiler thermostat to 'O'. To re-light the boiler, simply switch on the time control or boiler thermostat.
For longer periods: Turn off the time control, if fitted; turn off the boiler thermostat, then partly depress and turn the gas control knob clockwise as far as possible and release it. Switch off the main electricity supply. To re-light the boiler, follow the full procedure
'LIGHTING THE BOILER'.

NOTE: If the system is fitted with a low limit thermostat and protection of the system is required during cold weather, all that is required is for the programmer to be turned to the 'OFF' position. This will allow the boiler to cycle if the temperature in the house becomes too low.

IMPORTANT

Gas and electricity are required to operate your boiler. Its performance will not be affected by normal variation in gas or electricity supply, but a gas failure will put the boiler out of operation and it should be re-lit in the normal manner. In the case of a failure of the electricity supply, the boiler will re-light automatically when the supply is restored, provided that the time clock and/or thermostats are in an ON' position, i.e. the pilot normally remains alight without an electrical supply. See also Overheat Limit Thermostat.
In the event of your boiler not working, there are several checks you should carry out before calling in a service engineer, as this could save you unnecessary expense.

1 Check that the gas, electricity and water are all turned on at the main supply.
2. Check that the time control, if fitted, is in an 'ON' period.
3. Check that all the thermostats in the system are not on low settings.

The boiler is fitted with a safety thermostat to protect against overheating of the water. Should this device operate, both the pilot and main burner are extinguished.
Access to the reset button is achieved by removing the controls cover as described under 'LIGHTING THE BOILER'.
To restart, allow the boiler to cool, press in the overheat thermostat reset button and follow the full procedure 'LIGHTING THE BOILER'. If problem persists, turn off the boiler and consult your local Gas Region or Service Engineer.
NOTE: Interruption of the electrical supply to the boiler may also cause the overheat thermostat to operate.

Having checked these points and if the boiler still fails to light, call in your local Service Engineer.

FROST PRECAUTIONS

If your boiler has to be shut down for several hours or more during very cold weather, it may be in danger of freezing, due to its position, i.e. it may be in an outhouse or part of the pipework maybe vulnerable frost. To avoid freezing, three methods of protection can be used:-

1. Insulation of the boiler and pipework, taking care not to impede any ventilation air supply.

2. Completely draining the water system if not in use for long periods, If the boiler is installed on a sealed system, draining and refilling must be carried out by a competent person, e.g. your Service Engineer. NOTE: Although the system can be emptied by using the drain-off taps installed in the pipework around the system, to empty the boiler it is necessary to remove the drain plug situated on the front lower right of the casting. This operation is best left to your Service Engineer.

3. Having a low limit thermostat fitted. Seek advice from your installer.

If a low limit thermostat has been fitted, it cannot operate if the boiler is completely shut down and the electricity supply turned off. In this instance, the system will have no protection and one of the other methods must be used.

If no protection is provided it may be necessary to run the boiler at low thermostat settings at times when it would normally be shut off.

CLEANING THE OUTSIDE OF THE BOILER CASING

The outside of the boiler casing can be wiped when necessary by using a damp cloth to remove finger marks etc. Do not use an abrasive as this may damage the casing finish.

CARE OF YOUR BOILER AND SYSTEM DURING THE GUARANTEE PERIOD AND BEYOND

See Back Page

1 Registration of Purchase

It is important to register the purchase of your Potterton boiler to ensure you receive prompt and efficient handling in the event your boiler requires attention during the guarantee period.

To register your guarantee simply complete and detach the Registration of Purchase form enclosed with these instructions. It is important to include details of your installer (if known) and to return the completed form to the Potterton Registration Department.

2. During the Guarantee Period

In the event of any problems with your system or the operation of your boiler**, you should first call your installer.** If there is a fault with the boiler under guarantee which your installer is unable to rectify, he will call Potterton Service Operations. For 12 months after the date of installation of the boiler (or 18 months from the date of manufacture, whichever is the shorter), Potterton will attend to any manufacturing defect, on the appliance only (not the system or ancillary controls), free of charge for parts and labour, subject to there being no misuse or abuse. This does not affect your statutory rights.

Service visits by Potterton Service Operations outside the terms of the boiler guarantee will be charged for both parts and labour at our normal rates for chargeable work.

During the period of the boiler guarantee, Potterton will only be responsible for the costs of work done by them or on their instructions by their Agent. We cannot accept any liability for expenditure or work done by other parties without our knowledge and/or approval.

3. Safety Check/Routine Maintenance

It is strongly recommended you have your boiler checked annually for safety and to have routine maintenance. This should be carried out by a CORGI Registered Installer/Service Agent or Potterton Service Operations to comply with the requirements of the Gas Safety (Installation and Use) Regulations 1994

4. Boiler Breakdown Insurance

We are pleased to offer you the opportunity to protect your investment once your boiler guarantee has expired, by the payment of an annual premium. You can continue with this insurance for the normal life of your boiler and you will find a special 30 day introductory offer for second year cover together with a card to register your purchase, as part of the ‘User Pack’ supplied with your boiler.

If you have not been handed a Registration Card/Optional 2nd Year Breakdown Insurance Offer, please contact the Potterton Registration Department for a copy by telephoning 0181 944 4972

Back page

Publication No. 550523/0006

POTTERTON

Prima C

30C, 40C, 50C & 60C
open flue gas fired boiler

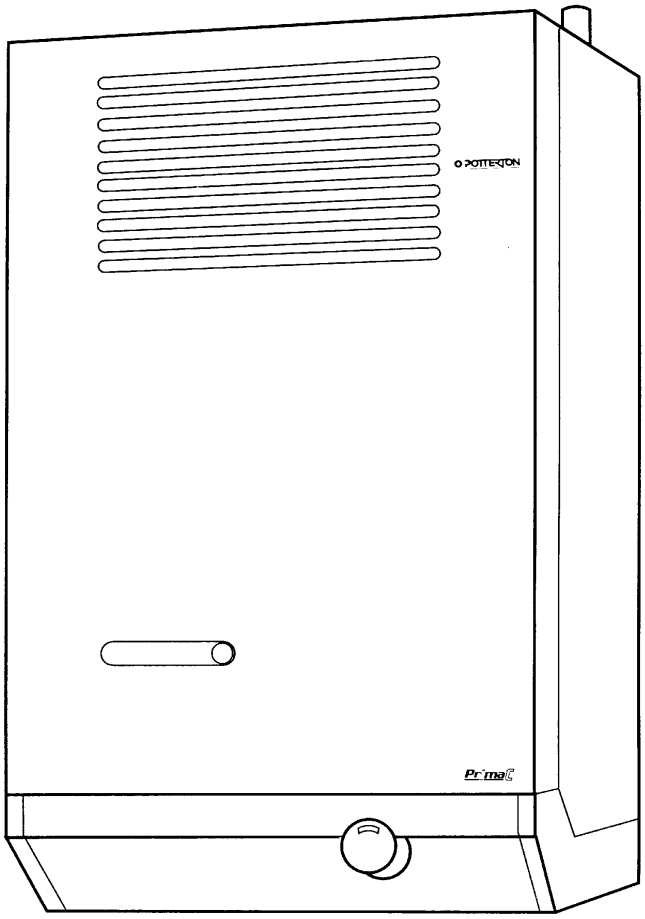

FOR USE WITH NATURAL GAS (G20) ONLY

Read these instructions thoroughly before working on the boiler.
Leave the instructions adjacent to the gas meter.

GAD (90/396/EEC)

POTTERTON PRIMA 30C G.C. No. 41.605.90
POTTERTON PRIMA 40C G.C. No. 41.605.91
POTTERTON PRIMA 50C G.C. No. 41.605.92
POTTERTON PRIMA 60C G.C. No. 41.605.93

IMPORTANT

This appliance must be installed by a competent person as stated in the Gas Safety (Installation and Use) Regulations 1994.

Prima boilers are certified for safety, it is therefore important that no external control devices (eg. flue dampers, economisers etc.) be directly connected to these appliances unless covered by these installation instructions or otherwise recommended in writing. Any direct connection of a control device not approved by Potterton Myson could invalidate the certification and the normal warranty.

LIST OF CONTENTS

GENERAL

Once the pilot has been lit Potterton Prima C boilers are automatic in operation. They are wall mounted natural draught open flue appliances using a cast iron heat exchanger and are available in four outputs ranging from 5.86-17.58kW (20,000-60,000 Btu/h).

The boilers which are designed to provide domestic hot water and/or central heating must be used on INDIRECT hot water systems only.

The cast iron heat exchanger is suitable for use on open vented gravity hot water/ pumped central systems or fully pumped systems which may be sealed or open vented.

ACCESSORIES - Page 3

The following range of Potterton Myson system controls are also available and further information will be provided on request.
Electronic Programmer EP2001, EP3001, EP4001, EP5001 and EP6000.
Programmable Electronic Thermostat PET1
Thermostatic Radiator Valve.
Electronic Cylinder Thermostat PTT2 or PTT100
Electronic Room Thermostat PRT2 or PRT100
Motorised Zone Valve MSV222 or MSV228
Motorised Diverter Valve MSV322

INSTALLATION DATA - Page 3

The installation of the boiler must be in accordance with the latest relevant requirements of the Gas Safety (Installation and Use) Regulations 1994, local building regulations, IEE Wiring Regulations and the byelaws of the local Water Undertaking.

Detailed recommendations are contained in the following British Standard Codes of Practice:-

BS6798. BS5440 Part 1.
BS5440 Part 2. BS55449 Part 1.
BS5546, BS4814,
BS6891 BUILDING REGULATIONS.
MODEL WATER BYELAWS.
BRITISH GAS PUBLICATION DM2.
GAS SAFETY (INSTALLATION AND USE) REGULATIONS 1994.
BUILDING STANDARDS (SCOTLAND) REGULATIONS.

BOILER DIMENSIONS - Page 3

Figure 1 BOILER DIMENSIONS (mm)

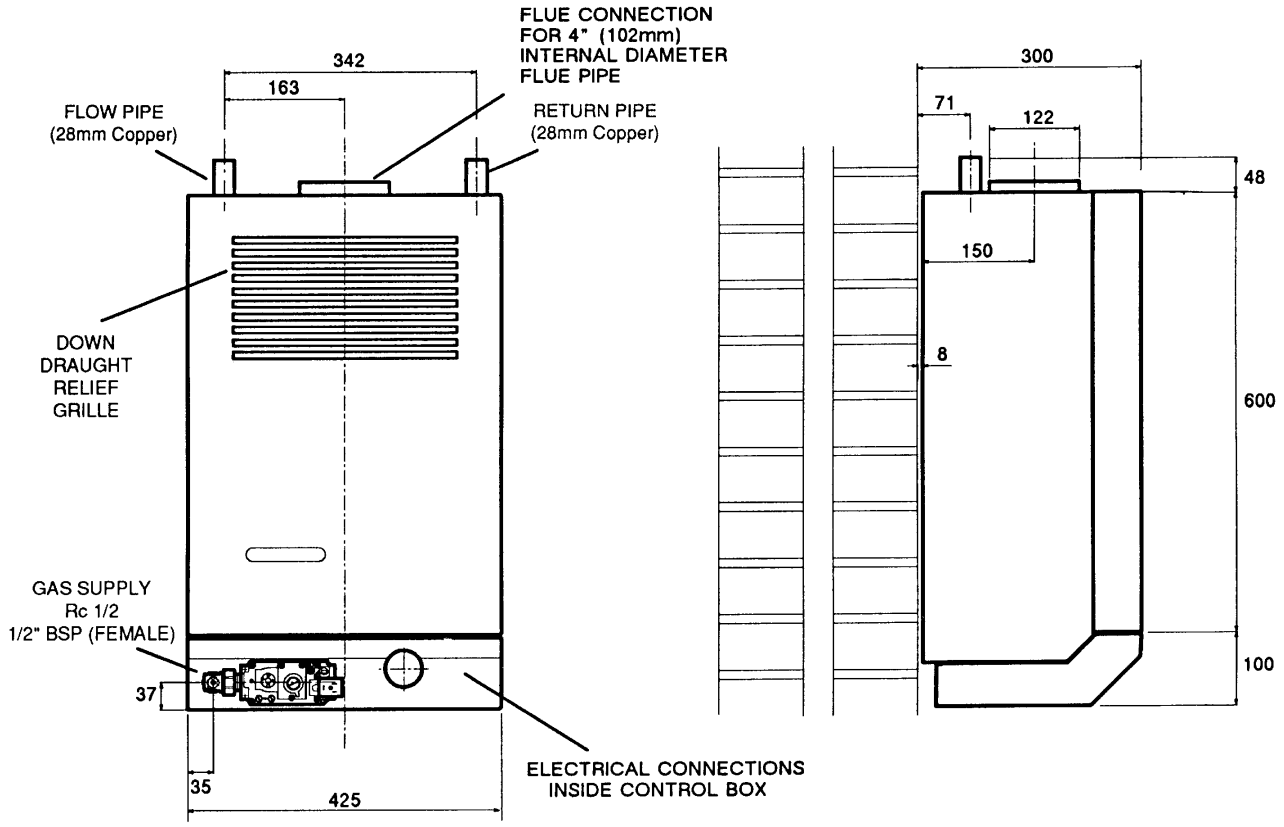

Figure 2 - GENERAL ARRANGEMENT

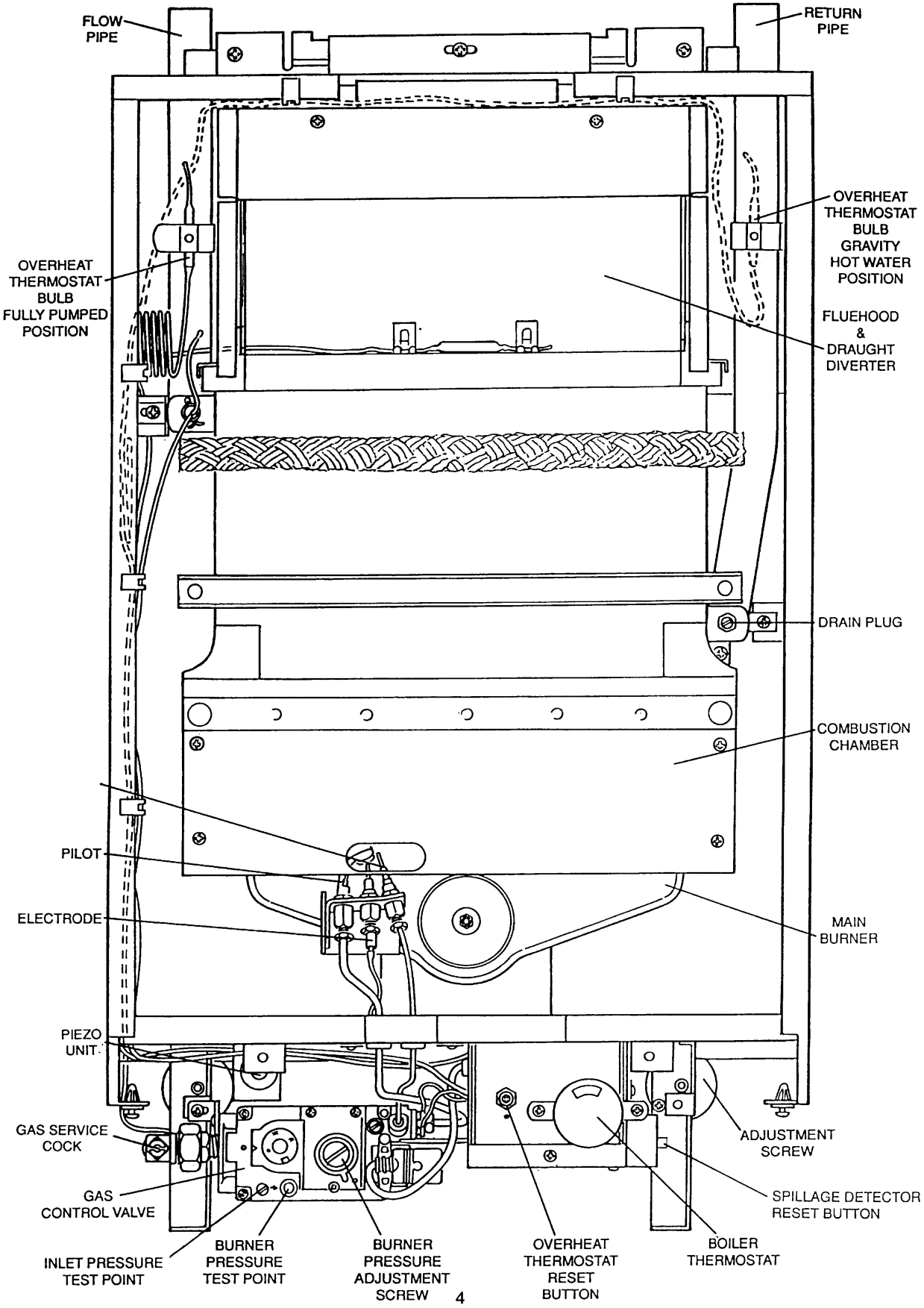

These boilers are not suitable for external installation. The appliance must not be installed in bathrooms, shower rooms, bedrooms, bed-sitting rooms, garages or rooms where highly inflammable materials or vapours are likely to be present. Fitting in toilets or cloakrooms is not recommended but is permitted, provided the combustion air is taken direct from outside. Where installation of the boiler will be in an unusual location special procedures may be necessary and BS6798 gives detailed guidance in this aspect.

Ensure that the gas supply pipe and meter are large enough for this appliance and any others that may be run off the same meter. Reference should be made to BS6891

Boiler Mounting Surface.
The boiler must be mounted on a flat wall, which may be of combustible material and must be sufficiently robust to take the weight of the boiler. It is recommended that any wall covering behind the boiler that may discolour should be removed before mounting the boiler. The requirements of the local authorities and the Building Regulations must be adhered to.

IMPORTANT NOTICE:
TIMBER FRAMED HOUSES
If the appliance is to be fitted in a timber framed building, it should be fitted in accordance with British Gas Publication 'Operational Procedures for Customer Service' Part 19. If in any doubt, advice should be sought from the local region of British Gas.

Clearances Around the Boiler
This appliance must at all times be fitted more than 100mm (4in) above floor level.
The following minimum clearances must be maintained after installation for correct operation and servicing of the boiler:-
610mm (2ft) at the front of the boiler.
5mm (0.2in) each side of the boiler.
100mm (4in) at the top.
100mm (4in) at the bottom where fitted above a working surface etc.
Additional clearances to these may be required for installation and are left to the discretion of the installer.

Combustion Air and Ventilation Requirements
General recommendations are given in BS5440 Part 2, and the following notes are given as a general guide.

1. Ventilation of Compartments containing Gas Boilers
THE 60C IS NOT SUITABLE FOR INSTALLATION IN A COMPARTMENT.

For other models there should be two permanent air vents, one at low level and one at high level. Each opening, whether left free or furnished with a grille, must have a minimum effective area in accordance with Table 1.

TABLE 1

Level of Air Vent		Area for air whether taken from a Room or Outside	
		sq. in.	sq. cm.
30C	High	38	245
	Low	38	245
40C	High	52	335
	Low	52	335
50C	High	66	425
	Low	66	425

There must be at least 300mm (l2in) clearance between the grille on the front of the boiler casing and any internal surface of the cupboard to allow for adequate air for operation of the draught diverter.
Further details for installation of a boiler within a compartment are given in BS6798.

2. Ventilation of rooms containing Gas Boilers.

The ventilation of the room containing the boiler shall include air for combustion and draught diverter dilution. This applies also when the boiler is sited in a compartment, unless the air vents are both direct from outside.
A permanent air vent shall be provided in an outside wall of the building at either high or low level.

This opening may be:

a Directly into the room or space containing the boiler or,

b Via a duct through the wall or roof of the room, (where such a method is considered British Gas should be consulted) or,

c Into an adjacent room or space which has an internal permanent air vent of the same size to the room containing the boiler. It is undesirable to ventilate via a kitchen, bathroom or toilet.

The air vent should be sited as far as possible from any extract fan to avoid short circuiting. To avoid the possibility of freezing water pipes, the vent should not be sited near pipes. The minimum effective area of the permanent air vent must be:

30C	22 sq cm	3.4 sq in
40C	39 sq cm	6.0 sq in
50C	56 sq cm	8.7 sq in
60C	74 sq cm	11.5 sq in

If the room (e.g. kitchen) from which air is drawn, has an extract fan fitted, then the opening size of the permanent air vent should take this into account to ensure that the operation of the boiler flue is not adversely affected when the extract fan is running with all doors and windows closed. This should be checked in accordance with BS5440 Parts 1 and 2.

3. Grilles and Ducts

Any grille and/or duct should be so sited and of a type not to become easily blocked or flooded and should offer low resistance to air flow.

FLUE

A 100mm (4in) internal diameter flue must be connected to this appliance to evacuate the products of combustion from the boiler. The flue connecting socket on the boiler is designed to accept flue pipe to BS567.

If a fluepipe to BS715 is to be used an adaptor must be fitted to the boiler connecting socket.

Reference should be made to The Building Regulations and British Standard 5440 Part 1. The following notes have been compiled for your guidance:-

a The flue pipe should be at least 25mm from any combustible material, or when passing through a wall, floor or roof, be separated from any combustible material by a non-combustible sleeve enclosing an air space of at least 25mm around the flue pipe.

b Ideally a flue should rise vertically to a termination point which is unaffected by down draught or wind eddies. Therefore, for practical purposes, the flue should have the shortest run possible; 90° bends should be avoided. The terminal should be at least above roof edge level and must be of a type acceptable to British Gas.

c Wherever possible there should be at least 600mm (2ft) of vertical flue from the boiler flue socket.
Note; A split socket should be fitted in this length.

d Horizontal runs should be avoided. If a near horizontal length is unavoidable, it must be followed by at least twice that length of vertical flue.

e Wherever possible internal stacks, lined if necessary, should be used.

f All brick chimneys must be lined with a liner acceptable to British Gas.

g Where condensation is likely a means of draining must be provided.

h If an existing flue is being used, ensure that it has been thoroughly swept before lining or connecting the boiler.

ELECTRICITY SUPPLY - Page 7

A 240 volts ~ 50Hz. single phase electricity supply fused at 3A must be provided in accordance with the latest edition of the IEE wiring regulations and any other local regulations that may apply. The current rating of the wiring to the boiler must exceed 3 amperes and have a cross sectional area of at least 0.75mm^2 in accordance with BS6500 1990 Table 16. The method of connection to the electricity supply MUST facilitate complete isolation of the appliance, preferably by the use of a fused three pin plug and unswitched, shuttered socket outlet, both complying with the requirements of BS1363. Alternatively, connection may be made via a fused double pole isolator having a contact seperation of 3mm in all poles and serving the appliance and system controls only.

TECHNICAL DATA - Page 7

Boiler Type	B11Bs
Maximum Working Head	30.5m (l00ft)
Minimum Working Head (Fully pumped systems)	150mm (6in)
Minimum Circulating Head (Gravity systems)	1.2m (4ft)
Gas Supply Pressure	20 mbar
Maximum Flow Temperature	82°C
Electricity Supply	240v ~ 50Hz fused at 3A
Flow/Return Connection	28mm copper
Gas Supply Connection	Rc, ½ (½ in BSP Female)
Power Consumption	20 watts

	30 & 40 model	50 & 60 model
Water Content	1.8 litre 0.4 gal	2.5 litre 0.55 gal
Appliance Weight - installed	36.3 kg 80.0 lbs	44.0kg 97.0 lbs
Appliance Weight - lift	31.0kg	38.5 kg

BOILER SIZE		INJECTOR SIZE	GAS RATE m3/h (ft3/h)	INPUT Kw(Btu/h)	OUTPUT kW(Btu/h)	BURNER PRESSURE Mbar	in wg
	Min		0.76 (26.84)	8.20 (27978)	5.86 (20,000)	7.8	3.1
30		2.6mm	0.95 (33.54)	10.18 (34734)	7.33 (25,000)	11.8	4.7
	Max		1.09 (38.49)	11.72 (40000)	8.79 (30,000)	15.7	6.3
	Min		1.15 (40.51)	12.29 (41930)	8.79 (30,000)	9.5	3.8
40		3.1mm	1.33 (46.98)	14.25 (48620)	10.26 (35,000)	12.7	5.1
	Max		1.46 (51.49)	15.62 (53295)	11.72 (40,000)	15.3	6.1
	Min		1.47 (51.90)	15.74 (53700)	11.72 (40,000)	9.3	3.8
50		3.55mm	1.65 (58.36)	17.70 (60400)	13.19 (45,000)	11.6	4.7
	Max		1.81 (64.00)	19.41 (66225)	14.7 (50,000)	14.2	5.7
	Min		1.86 (65.68)	19.9 (68000)	14.7 (50,000)	10.8	4.3
60		3.8mm	2.01 (70.97)	21.60 (73800)	16.12 (55,000)	13.0	5.2
	Max		2.17 (76.62)	23.3 (79500)	17.6 (60,000)	15.2	6.1

Circulation Pump Selection

The resistance through the heat exchangers when operating with a water flow rate producing an 11°C temperature rise at maximum boiler output is shown in TABLE 2. If other controls, such as three-position valves are used in the system, the resistance through them, quoted in their manufacturers literature must be taken into account. The pump may be fitted on either the flow or return and on FULLY PUMPED systems MUST be wired directly to the boiler terminal block, see Fig 14.It must be fitted with two isolating valves which are positioned as close to the pump as possible. Isolation of the valves must always leave the open vent unobstructed.

TABLE 2

Boiler size	Water Flow Rate		Boiler Resistance Without Disk		Boiler Resistance With Disk	
	Litres/min	gal/min	kN/m	in wg	kN/m	in wg
30	11.37	2.5	0.63	2.5	1.75	7.0
40	15.18	3.34	1.13	4.5	3.0	12.0
50	18.96	4.17	1.75	7.0	4.5	18.0
60	22.73	5.0	2.5	10.0	6.25	25.0

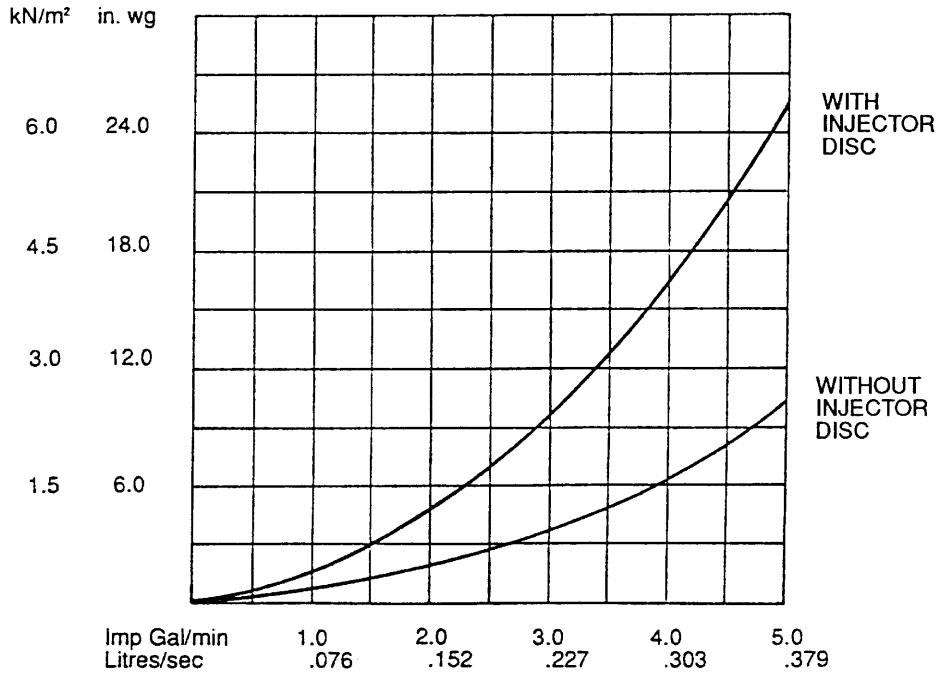

Figure 3 PRESSURE LOSS ACROSS BOILER

THE SYSTEM

The boiler must be used on INDIRECT hot water systems only. It is suitable for use on open vented gravity hot water/pumped central heating systems or fully pumped systems which may be sealed or open vented

The system should be designed so that the maximum static head does not exceed 30.5m (l00ft) and a minimum on fully pumped systems of 150mm (6in). See Fig 4.
Gravity domestic hot water circuits should have a minimum circulating head of 1.2m (4ft). See Fig 5. Excessive horizontal runs should be avoided, but if this is not possible the circulating head should be increased.

If the boiler is to be used on a system with gravity hot water the bulb of the overheat thermostat should be repositioned as shown on Fig 2.

To prevent reverse circulation in the gravity circuit when the pump is running an injector disc is provided to form an injector tee at the return connection on the boiler. See Fig 11.

To prevent nuisance operation of the overheat thermostat, it is important that where electrically operated zone valves are used the boiler is wired so that it does not cycle when the zone valves are closed. Also systems fitted with controls that close both hot water and central heating circuits while the boiler is still hot must be fitted with a by-pass circuit to dissipate the residual heat within the boiler.

Further information on by-pass arrangements is provided in later notes and illustrations.

Drain-off taps should be fitted in the pipework close to the boiler and in low points in the system.

NOTE

Although the system can be emptied using the drain-off taps in the pipework around the system, to empty the boiler it is necessary to remove the drain-off plug situated in the return header at the lower right-hand side of the casting. See Fig 2.

COMBINED GRAVITY HOT WATER AND PUMPED CENTRAL HEATING SYSTEMS

Where a cylinder thermostat and zone valve are fitted to control the temperature of the domestic hot water it is recommended that a by-pass be installed in the gravity circuit. A suggested method of doing this is shown in Fig 5 where the bathroom radiator is connected into the gravity circuit and is fitted with two lockshield valves. Mechanically operated thermostatic domestic hot water temperature control valves which allow the boiler to operate when the valve is closed MUST NOT BE FITTED.

FULLY PUMPED SYSTEMS

The pump must always be wired directly to the boiler terminal block as shown in Fig 13.

If a three port diverter valve is used as shown in Fig 4 a by-pass is not necessary since one circuit is always open.

Where a pair of two port valves are used, a by-pass is necessary. The total length of the by-pass circuit taken from the boiler connections should be greater than 4 metres of 22mm pipe. It should be fitted with a lockshield valve and adjusted to maintain a minimum flow through the boiler of 4.5 litres/min (1 gal/mm), see Figs 4 & 6.

Systems fitted with controls which allow the boiler to operate when both the hot water and central heating circuits are closed (i.e. mechanically operated thermostatic control valves) must be fitted with a by-pass circuit capable of:-

1. Dissipating a minimum of 1 kw (3400 Btu/h).

2. Maintaining a minimum water flow through the boiler of 9 litres/min (2 gal/min).

A suggested method of meeting these requirements by using a bathroom radiator fitted with two lockshield valves is shown in FIGS. 4,6.

Additional system information can be found in the Control Systems, Pipework and wiring guide.

SEALED SYSTEMS (FULLY PUMPED)

The installation must comply with the requirements of BS6798 and BS5449 Part 1. The ‘British Gas publication British Gas Specification for Domestic Wet Central Heating Systems’ should also be consulted.

Safety Valve

A non-adjustable spring-loaded valve, pre-set to operate at 3bar (45lbf/in2) shall be used. It must comply with BS6759 Part 1 and include a manual

testing device. It shall be positioned in the flow pipe either horizontally or vertically upwards and close to the boiler. No shut-off valves are to be placed between the boiler and safety valve. The valve shall be installed into a discharge pipe which permits the safe discharge of steam and hot water such that no hazard to persons or damage to electrical components is caused.

Pressure Gauge

A pressure gauge incorporating a fill pressure indicator, covering the range 1-4bar (60lbf/in2) shall be fitted to the system. It should be connected to the system, preferably at the same point as the expansion vessel. Its location should be visible from the filling point.

Expansion Vessel

A diaphragm-type expansion vessel to BS4814 Part 1 shall be fitted close to the inlet side of the pump. The connecting pipework should not be less than 15mm (½ in nominal). Pipework connecting the expansion vessel should not incorporate valves of any sort. Methods of supporting the vessel are supplied by the manufacturer. The nitrogen or air charge pressure of the expansion vessel shall not be less than the hydrostatic head, (height of the top of the system above the expansion vessel). To size the expansion vessel it is first necessary to calculate the volume of water in the system in litres. The following volumes may be used as a conservative guide to calculating the system volume.

Boiler Heat Exchanger	6.5 litres
Small Bore Pipework	1 litre per kW of system output
Micro Bore Pipework	7 litres
Steel Panel Radiators	8 litres per kW of system output
Low Water Capacity Radiators	2 litres per kW of system output
Hot Water Cylinder	2 litres

If the system is extended, the expansion vessel may have to be increased unless previous provision has been made for the extension. Where a vessel of the calculated size is not available, the next available larger size should be used.

The boiler flow temperature is controlled at approximately 82°C.

The vessel size can now be determined from the following table where V = System volume in litres.

Vessel Charge Pressure (bar)	0.5	.0
Initial System Pressure (bar)	0.5	1.0
Expansion Vessel Volume (litres)	V x 0.833	V x 0.11

This is a general guide; if it is required to be more accurate refer to BS7074.

Cylinder

The hot water cylinder must be an indirect coil type or a direct cylinder fitted with an immersion calorifier suitable for operating at a pressure of 0.3bar (5lbf/in2) in excess of safety valve setting. Single feed indirect cylinders are not suitable for sealed systems.

Method of Make-Up

Provision shall be made for replacing water loss from the system either:-

i) from a make-up vessel or tank mounted in a position higher than the top point of the system, and connected through a non-return valve to the system on the return side of all heat emitters.

or

ii) Where access to a make-up vessel would be difficult by using the mains top up method or a remote automatic pressurisation and make-up unit as illustrated in Fig 6 METHODS 1 & 2.

Mains Connection

There shall be no connection to the mains water supply or to the water storage tank which supplies domestic water even through a non-return valve, without the approval of the local Water Authority.

Filling Point

The system shall be fitted with a filling point at low level which incorporates a stop valve to BS1010 and a double check valve (approved by the National Water Council) to be fitted in this order from the system mains. Refer to Fig 6 METHOD 1.

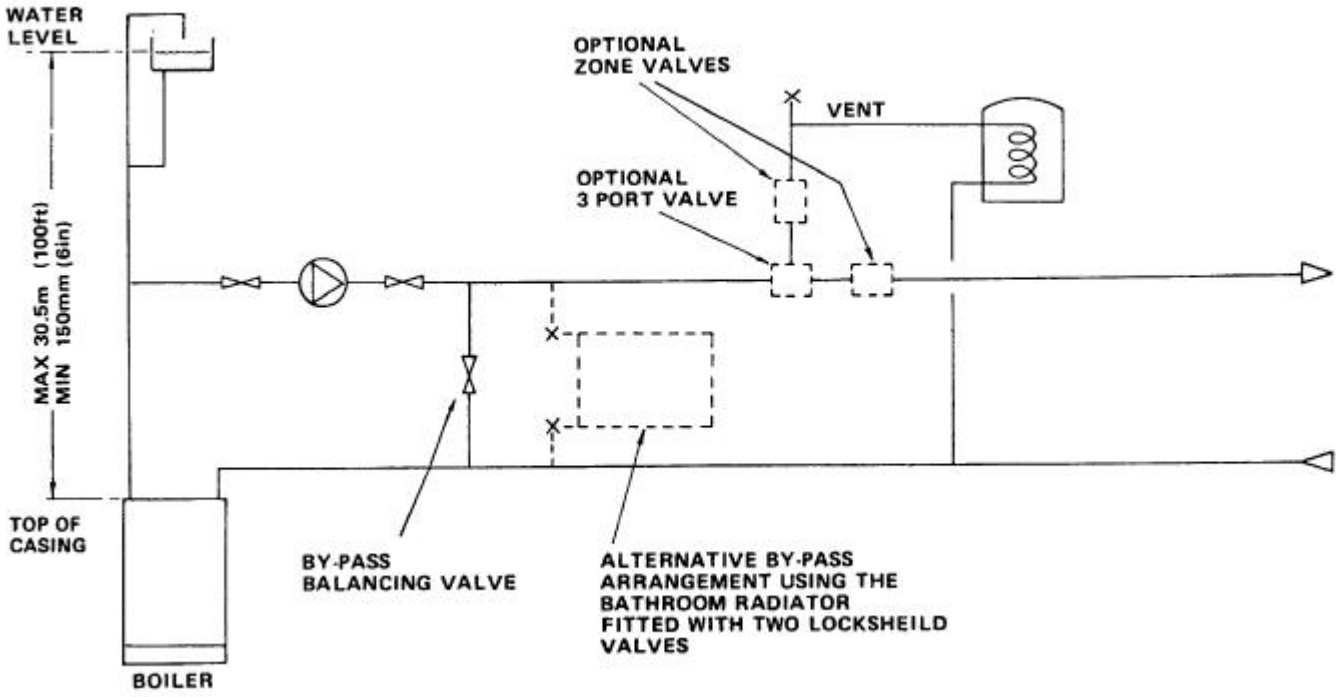

Figure 4 OPEN VENTED FULLY PUMPED SYSTEM WITH A COMBINED FEED AND VENT

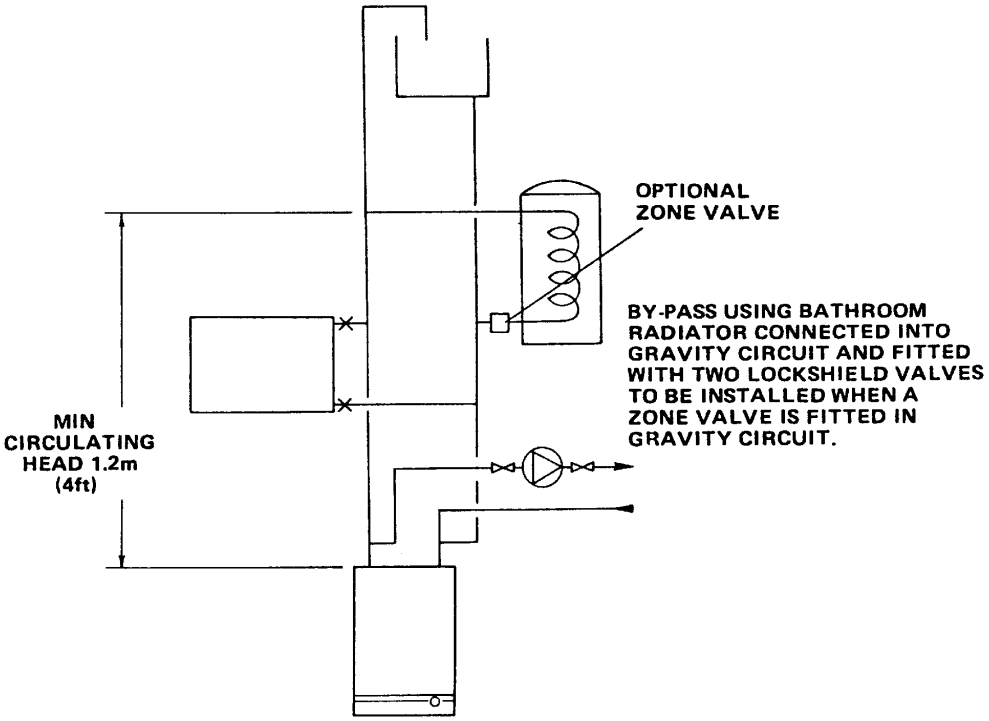

Figure 5 OPEN VENTED GRAVITY DOMESTIC HOT WATER PUMPED CENTRAL HEATING

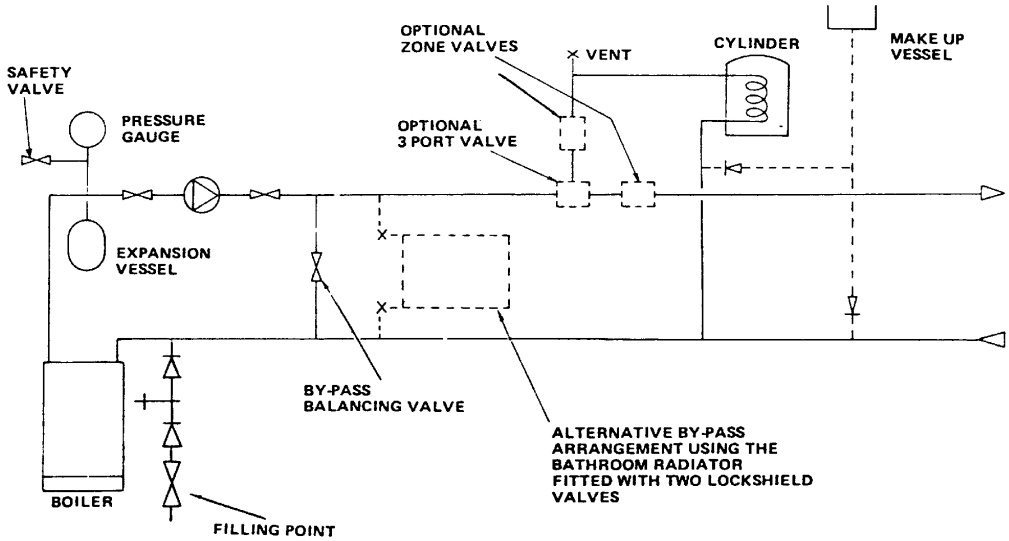

Two methods of filling a sealed water system

METHOD 1
MAINS TOPPING-UP METHOD

NOTE: This method of filling a sealed system may only be used if acceptable to the Local Water Undertaking

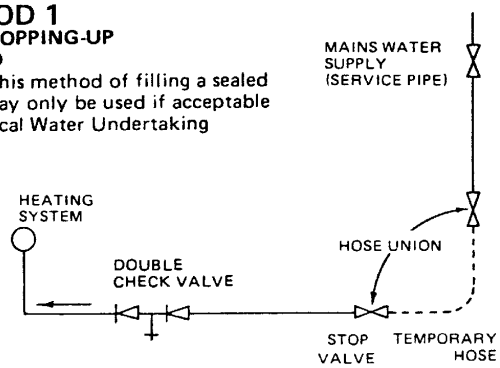

METHOD 2
CISTERN FILLING METHOD

NOTE: Cistern to be supplied through a temporary connection from a service pipe or cold water distributing pipe

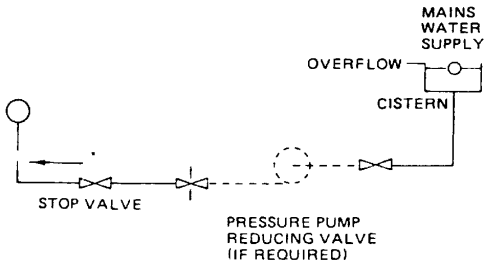

Figure 6 FULLY PUMPED SEALED SYSTEM

It is the law that all gas appliances are installed and serviced by competent persons as stated in the Gas Safety (Installation and Use) Regulations 1994.

Electrical installation and servicing should be carried out by a competent person in accordance with the I.E.E. Wiring Regulations

For Health and Safety information see back page.

The boiler and its associated equipment will arrive on site in one cardboard carton. The contents of the carton is as follows:-

Boiler
Template
Boiler Mounting Plate
Literature Pack containing:
- Installation & Servicing Instructions
- Users Instructions
- Control System Pipework and Wiring Guide

Auxilliary Pack containing
- Gas Service Cock
- Accessory Packs
- Adjustment screws

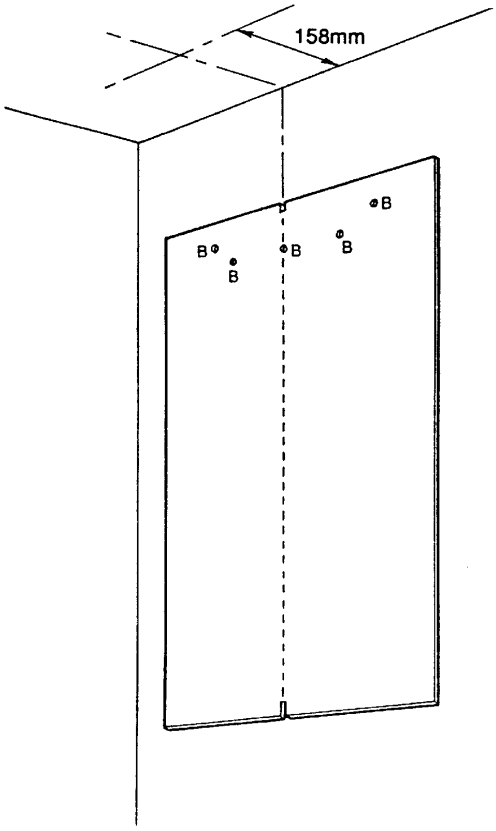

Figure 7 TEMPLATE

Place template in proposed boiler position taking due account of the information given previously and the position of the flue, (the minimum side clearances are automatically allowed for). Refer to page 5 for top and bottom clearances which can be measured from the template. Ensure that the template is level and mark hole positions ‘B’.

If the flue is to rise through the ceiling, mark out centre line of hole for flue by extending the dotted line on template vertically and measure out 158mm from rear wall as illustrated.

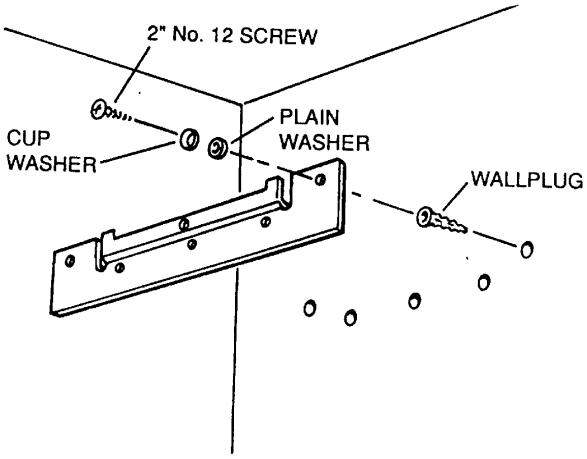

Figure 8 SECURING BOILER MOUNTING PLATE

Remove template and drill holes ‘B’ to a depth of 50mm using a 7mm drill. Cut hole through wall or ceiling as necessary for intended run of flue pipe.

Using wall plugs, screws and washers (accessory pack A) attach boiler mounting wall plate to wall ensuring that it is level.

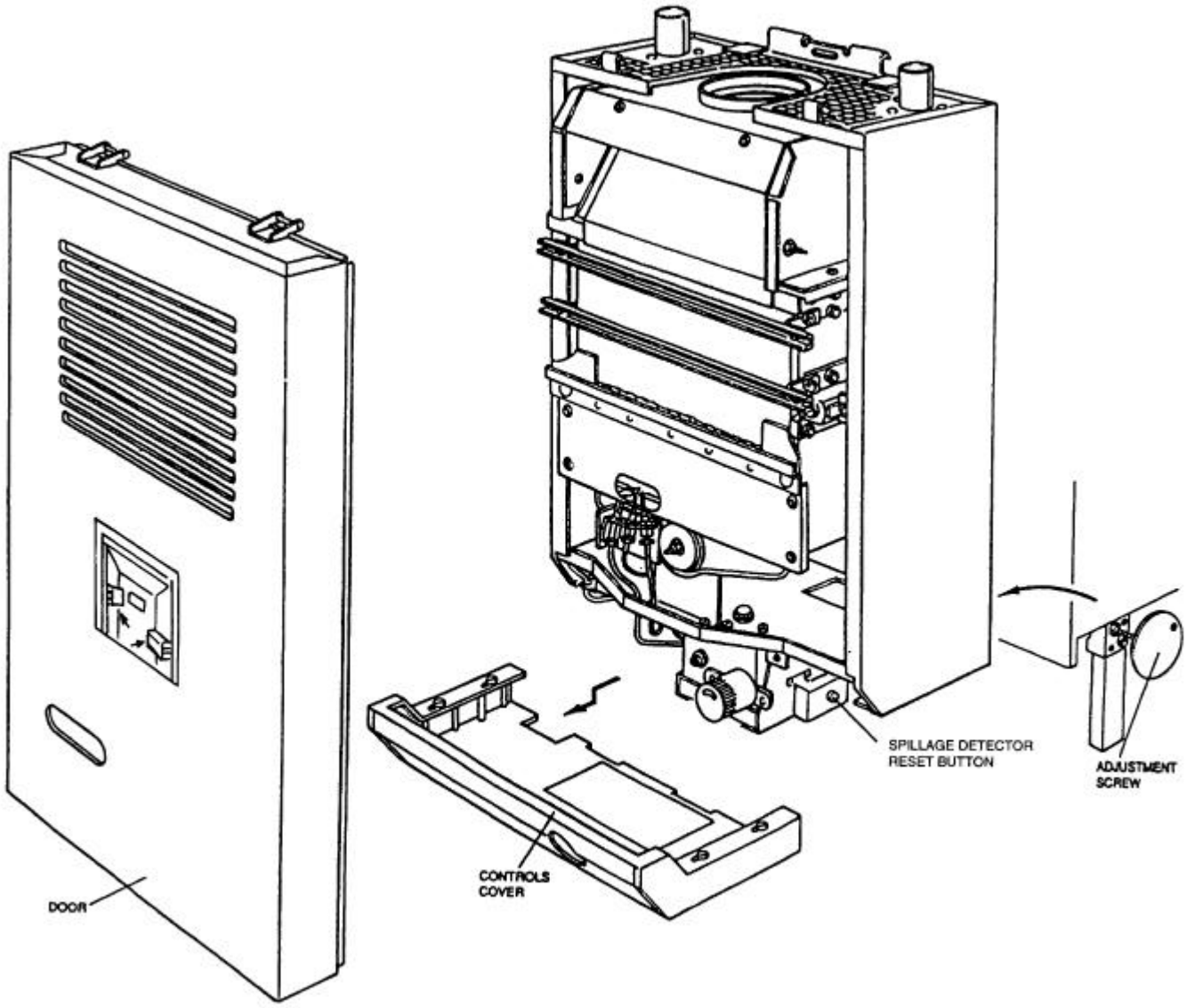

Figure 9 PREPARING BOILER

The controls cover should have been removed when unpacking the boiler, if not pull controls cover forward 25mm, lower to release from the four side fixings and pull forward clear of the thermostat knob

Remove door by undoing the two lower fixing screws and lift door off the two upper hinge brackets.

Engage adjustment screws into the boiler legs but do not screw in fully at this stage

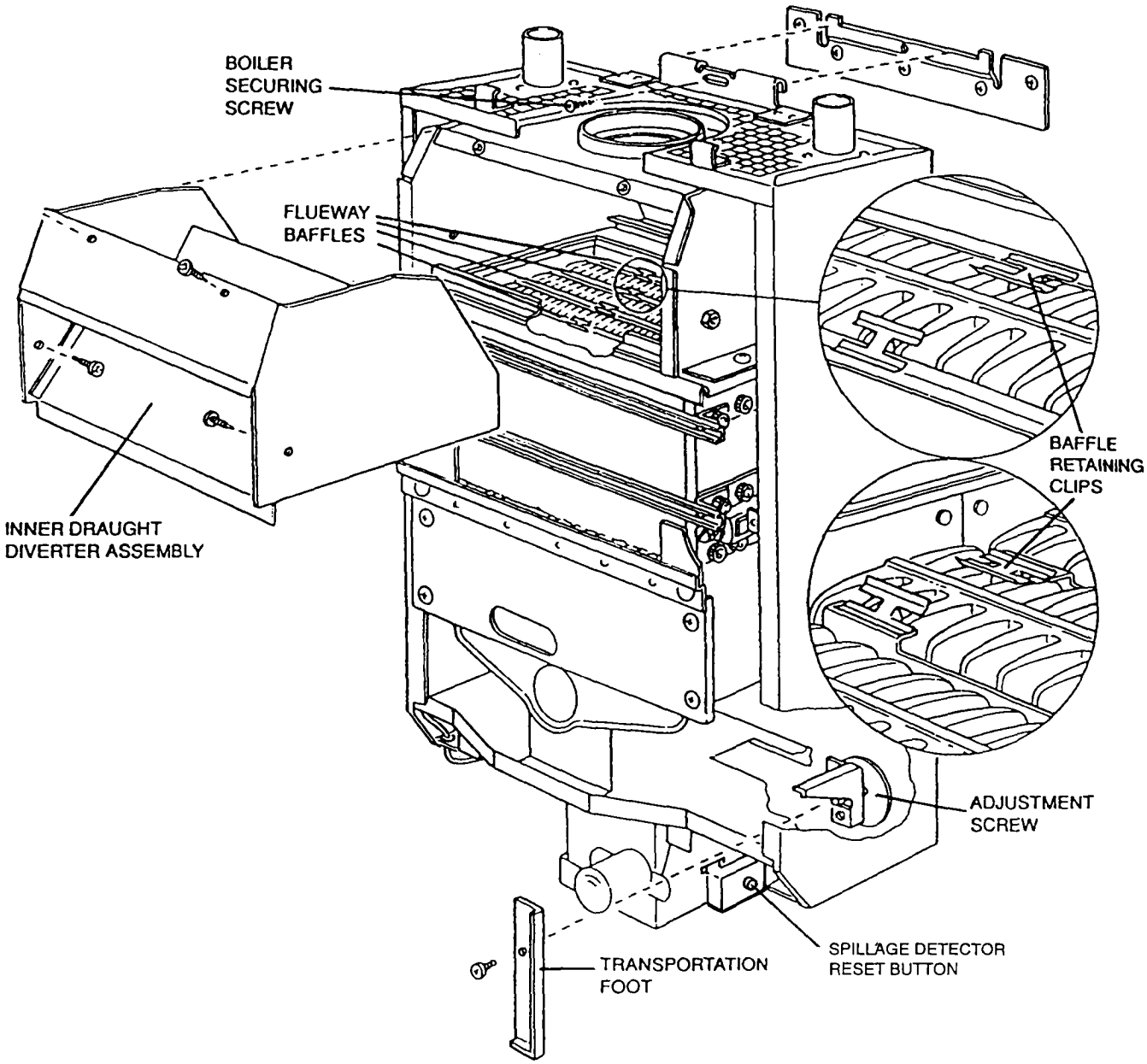

Figure 10 LIFTING AND ALIGNING BOILER

Lift boiler onto the mounting bracket and adjust the boiler position to obtain a minimum of 5mm clearance from any side wall or cupboard.

Secure boiler to the mounting bracket using 5mm screw from accessory pack A.

Undo the screws securing the transportation feet. Discard feet and screws.

Correct vertical alignment with rear wall as necessary using the adjustment screws

Remove the temporary cardboard packing pieces from either side of the casing

Remove the four securing screws and withdraw the inner draught diverter assembly. Check that the flueway baffles are correctly located and retained in the flueways as shown in Fig 10. Reassemble the draught diverter.

Make the flue connection to the boiler draught diverter sealing the joint with a suitable compound. Refer to the notes under FLUE page 6.

The weight of the flue must be supported independently NOT by the boiler.

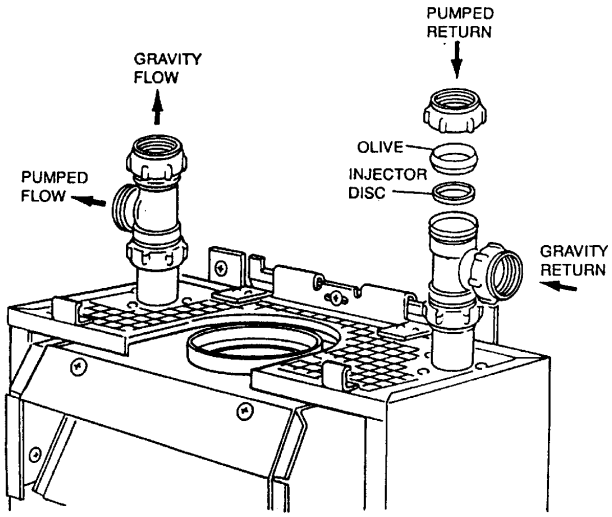

Figure 11 PIPE CONNECTIONS

Connect the system pipework to the boiler, compression fittings are recommended. If however, capillary fittings are used, it is essential to temporarily remove the thermostat bulb from the flow pipe before soldering.

A drain off tap should be installed close to the boiler if it is in a low point of the system.
On combined gravity hot water/pumped central heating installations the flow and return pipes for both the gravity hot water circuit and pumped central heating circuits must be connected to tees fitted directly to the flow and return pipes on the boiler.

The gravity circuit should be installed in 28mm copper pipe. 28mm tees should be used.

The injector disc (accessory pack G) must be positioned in the pumped return branch of the tee as illustrated in Figs 11 & 11B.

Remove gas service cock from the auxilliary pack and attach it to the union nut on the inlet to the gas assembly.

With the inlet connection of the gas service cock facing the rear, connect the gas supply pipe.

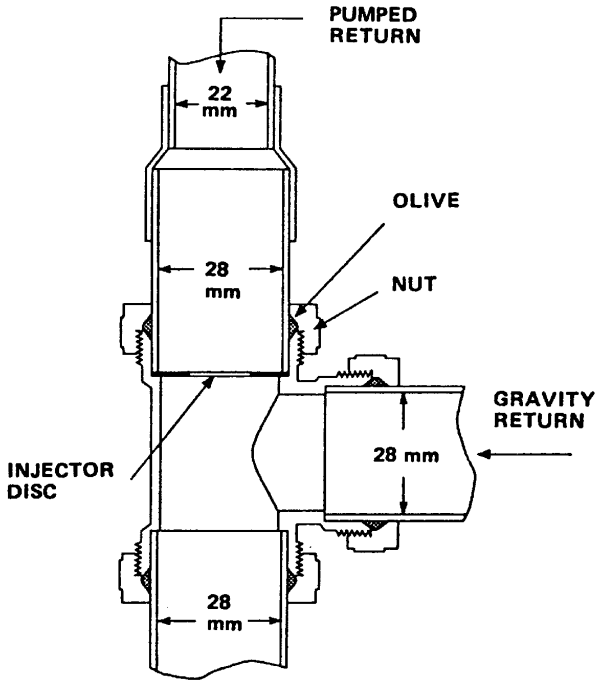

Figure 11B **WARNING:** UNDER NO CIRCUMSTANCES SHOULD A 'REDUCING SET' BE FITTED

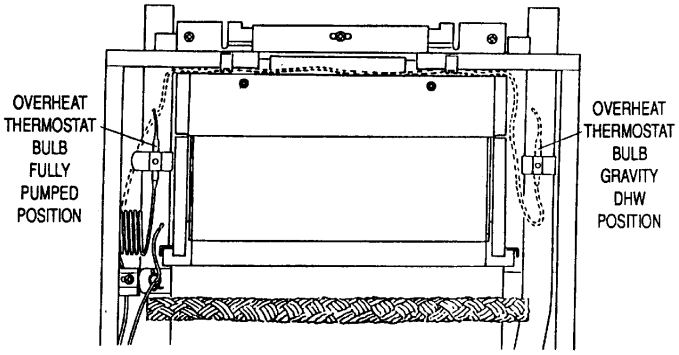

Figure 12

NOTE
The boiler is despatched with the overheat Thermostat bulb positioned for FULLY PUMPED OPEN VENTED OR SEALED SYSTEMS.

ONLY if the boiler is to be used on a GRAVITY DHW system should the bulb of the overheat thermostat be repositioned as described below, to prevent nuisance operation of the overheat thermostat.

Remove clip securing overheat thermostat bulb to the flow pipe.

Uncoil the thermostat capillary and route it through the two retaining clips attached to the front flange on the top panel. Position the thermostat bulb in the indent in the return pipe and secure in this position using the clip previously removed.

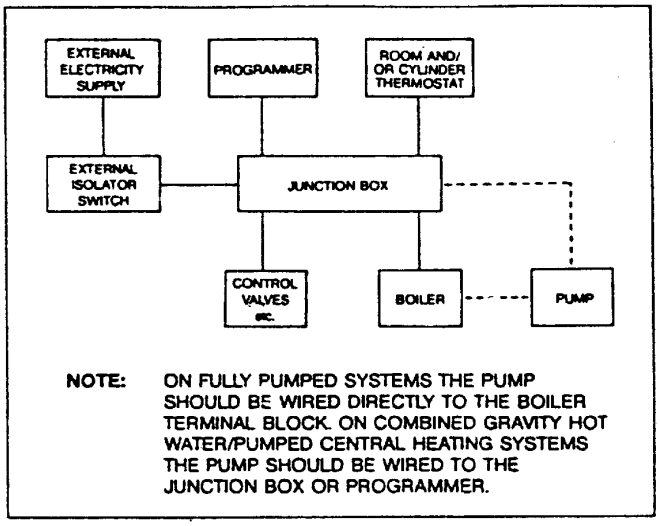

Figure 13 PRINCIPAL OF WIRING

WIRING
WARNING: This appliance must be earthed.
The boiler and all external control circuit wiring must be supplied from the same single isolating switch and should be fused at 3A.

Care must be taken to ensure that all wiring to the boiler is kept clear of sharp edges and hot surfaces.

Ensure that the earth conductor is longer than the L, N, and SWL from the point of anchorage, so that the current carrying conductors become taut before the earth conductor, if the cable is pulled out of the cable clamp.

The boiler terminal block which is situated in the control box is not designed to accept wiring from all the on site controls and therefore the installer will usually need to incorporate a suitable junction box or Potterton Electronic Programmer.

The principle of wiring is shown in Fig 13. It should be noted that the pump must be wired directly to the boiler terminal block on FULLY PUMPED systems and to the junction box or programmer on combined GRAVITY HOT WATER/PUMPED CENTRAL HEATING systems.

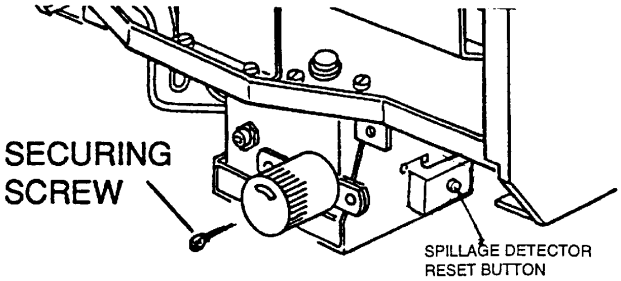

Figure 14 ACCESS TO THE BOILER ELECTRICAL TERMINAL BLOCK

Remove control box securing screw and lower the control box to gain access to the boiler terminal block.

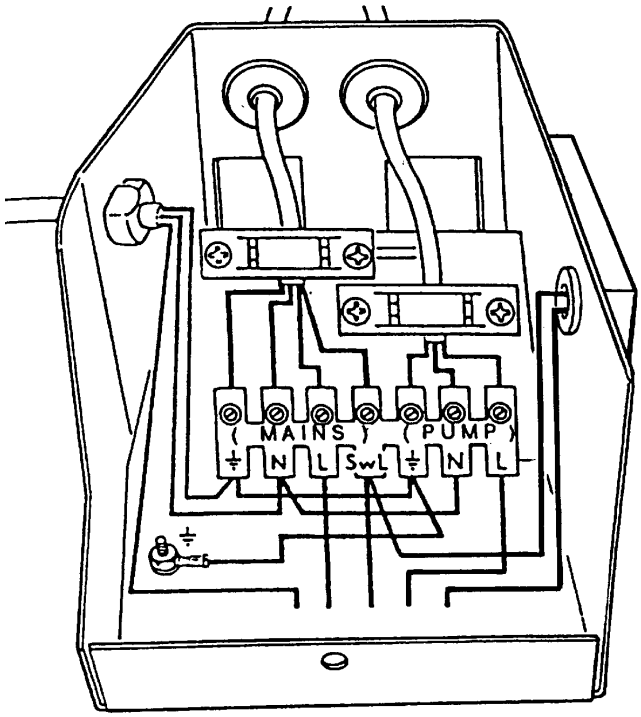

Figure 15 WIRING THE BOILER FOR A FULLY PUMPED SYSTEM

Route a four core cable through the plastic bush at the rear of the control box and the cable clamp as illustrated Fig 15, and connect it to the boiler input terminals as follows:-

Permanent live to terminal marked MAINS ‘L’
Neutral to terminal marked MAINS ‘N’
Earth to terminal marked MAINS +
Switched live from external controls to terminal marked MAINS SwL.

If there are no secondary controls fitted connect the SwL terminal to permanent live in the external junction box.

Secure the cable within the cable clamp by tightening the securing screws.

Following the pump manufacturers instructions connect the pump supply wires to terminals marked PUMP, L, N and 4” on the boiler terminal block.

Route the cable through the plastic bush in the rear of the control box and cable clamp as illustrated Fig 15. Secure cable in cable clamp by tightening the two securing screws.

Close control box and replace securing screw.

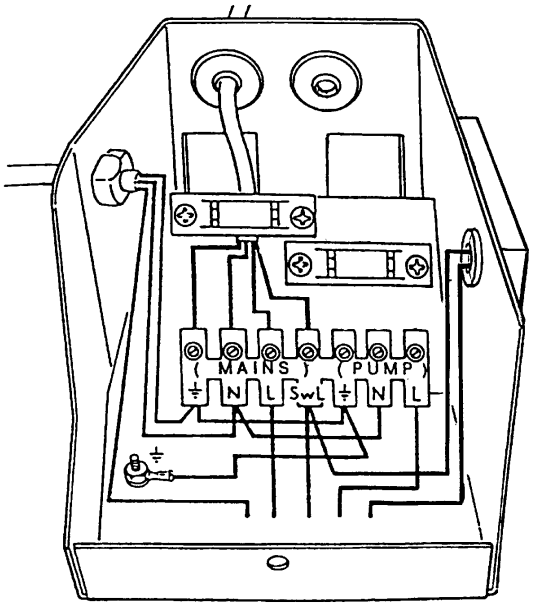

Figure 16 WIRING THE BOILER FOR COMBINED GRAVITY HOTWATER/PUMPED CENTRAL HEATING SYSTEM

Route a three core cable through the plastic bush in the rear of the control box and the cable clamp as illustrated I Fig 16. Connect the cable to the boiler input terminals as follows:

Switched live on the GRAVITY DHW control circuit to terminal marked MAINS 'SwL'
Neutral to terminal marked MAINS 'N'
Earth to terminal marked MAINS

Secure the cable within the clamp by tightening the two securing screws.

The pump should be connected to PUMPED CENTRAL HEATING control circuit at the junction box. See FIG. 13

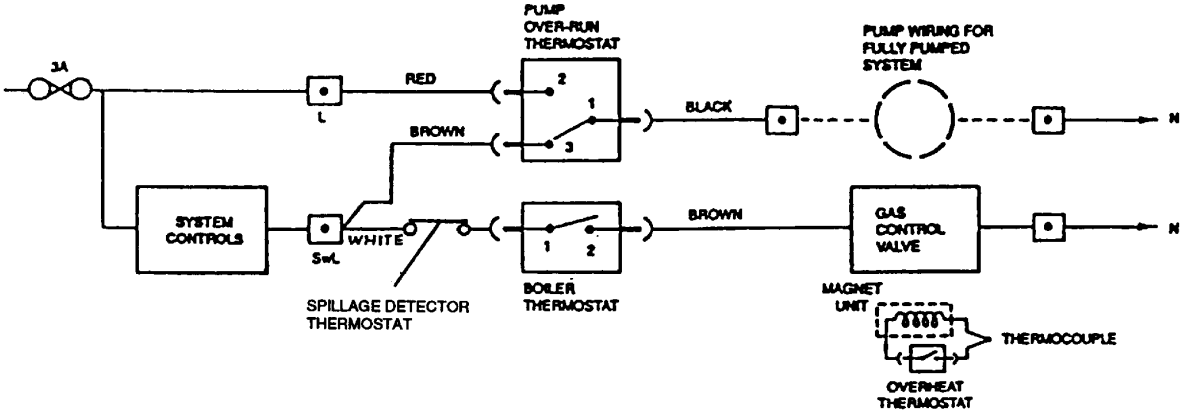

Figure 17 FUNCTIONAL FLOW DIAGRAM

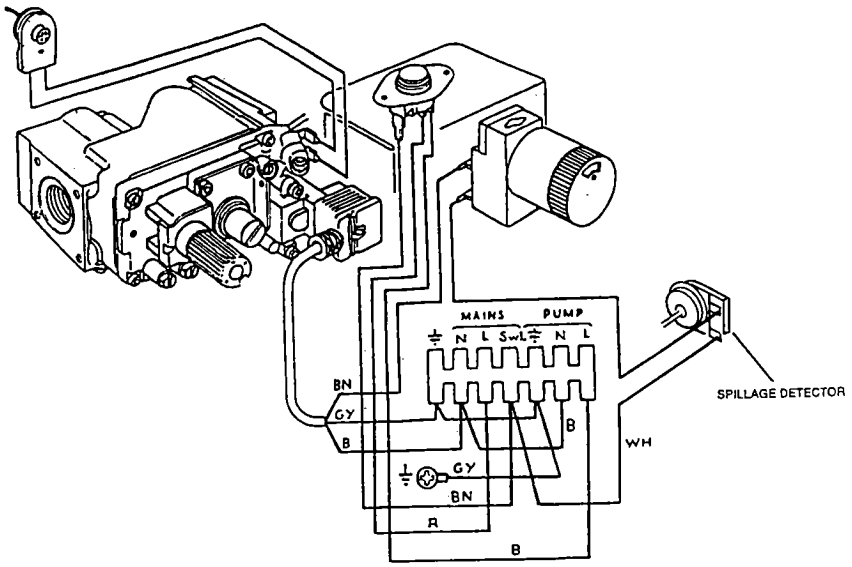

Figure 18 BOILER WIRING DIAGRAM

Open Vented Systems
Remove the pump and flush out the system thoroughly with cold water. Refit the pump, fill and vent the system and examine for leaks.

Sealed Systems
The system can be filled using a sealed system filler pump with a break tank or by any other method approved by the local Water Authority. Refer to FIG 6 and BS6798 1987. Remove pump and flush out the system thoroughly with cold water. Re-fit the pump. Fill and vent the system until the pressure gauge registers 1.5 bar (22.5lbf/in2), examine for leaks. Raise the pressure until the safety valve lifts. This should occur within ± 0.3 bar of the pre-set lift pressure of 3 bar. Release water to attain the correct cold fill pressure.

All Systems
The whole of the gas installation including the meter should be inspected and tested for soundness and purged in accordance with the recommendations of BS6891.
Fit the case door into position by lifting it onto the top hinge brackets and secure it with the lower two fixing screws.

First Lighting

A. Ensure that the pump and radiator isolating valves are open.
B. Turn the boiler thermostat to the ‘0’ position.
C. Turn on the main gas supply and the gas service cock on boiler.
D. Ensure that the time control, if fitted is in an ‘ON’ condition, and that the room and/or cylinder thermostats, where fitted are set to high temperatures.
E. Switch on the external electricity supply to the boiler. In the event of an electrical fault after installation of the appliance, preliminary electrical system checks must be carried out as described in the BG multimeter instruction book. The checks to be carried out are:
A - Earth Continuity, B - Short Circuit, C - Polarity, D - Resistance to Earth.
F. Partly depress and turn the gas control knob clockwise ensuring the symbol • lines up with the datum mark on the gas valve body. See Fig 19. This ensures that the valve is in the ‘OFF’ condition.
G. Partly depress and turn the control knob anti-clockwise until the symbol * lines up with the datum mark on the gas valve body. Press and hold in the control knob and press the spark generator button until a click is heard. Release the spark generator button and repeat operation until the pilot ignites. See Figs 2&19. Hold in the control knob for a further 15 seconds. On release the pilot should remain alight. Partly depress and turn the control knob anti-clockwise until the symbol lines up with the datum mark on the gas valve body.

NOTE:
On first lighting, establishment of the pilot flame may be slightly delayed due to the presence of air in the pipework. If the pilot fails to light or goes out at any time, immediately turn the control knob clockwise as far as possible, then release it and wait three minutes before repeating the lighting procedure. The control knob should not be touched during this period.

H. Turn the boiler thermostat on and to a high setting and the main burner will light.
I. Set the boiler thermostat and the room and/or cylinder thermostat(s) and time control, where fitted, to their required operating conditions.
J. After the boiler has operated for five minutes check that there is no spillage or leakage of combustion products in accordance with BS5440 Part 1. Check soundness of all appliance gas carrying components and joints using leak detection fluid and a mirror where necessary.
K. Switch off the boiler, using the thermostat knob.

NOTE: If the main burner fails to light turn the boiler thermostat to the off position and check that the spillage detector thermostat reset button (see Fig 18a) is pressed in, then repeat operation. If you have to keep resetting the thermostat, or the main burner fails to light consult the fault finding chart on page 26, Fig 23.

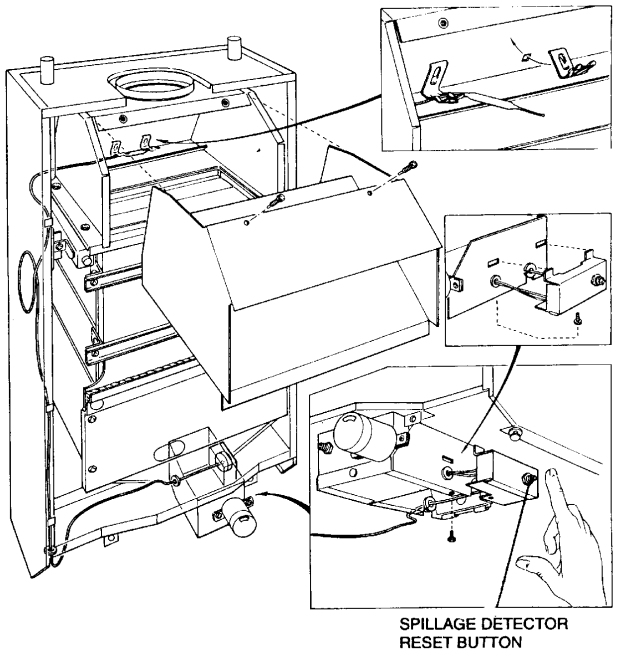

Figure 18a

FINAL ADJUSTMENT

A. Remove the screw from the burner pressure test nipple on the gas control valve and fit a pressure gauge to the test nipple. See Fig 19.
B. Turn on the boiler thermostat, then check that the pressure is in accordance with the values stated under TECHNICAL DATA. The burner pressure is factory set to the maximum stated.
C. If burner pressure adjustment is necessary, remove the screwed cap from the gas control valve, see Fig 19, and turn the screw beneath clockwise to increase pressure and anti-clockwise to reduce pressure.
D. With the burner set to its correct pressure, the firing rate given in TECHNICAL DATA should also be obtained and this should be checked by meter reading 10 minutes after the main burner has been lit.
E. Shut down the boiler, remove the pressure gauge. Replace the screwed cap and refit the screw in the test nipple. Re-light and test for gas soundness at the test nipple screw.
F. Remove the self-adhesive arrow from the inspection ticket tied to the burner supply pipe and stick it to the Data Plate inside the controls cover to indicate the appropriate burner setting pressure. Refit the controls cover.
G. Heat the system to maximum. Check for water leaks, turn the boiler off, drain the system whilst hot.
H. Refill the system and on sealed systems adjust to the correct cold fill pressure. Set the pressure gauge pointer to the system design pressure.
I. If a by-pass circuit is fitted, the by-pass valve should be adjusted with the boiler operating under minimum load conditions to maintain sufficient water flow through the boiler to ensure that the overheat thermostat does not operate under normal operating conditions.
J. Remove the temporary label from the front of the casing, having checked compliance with the information it contains

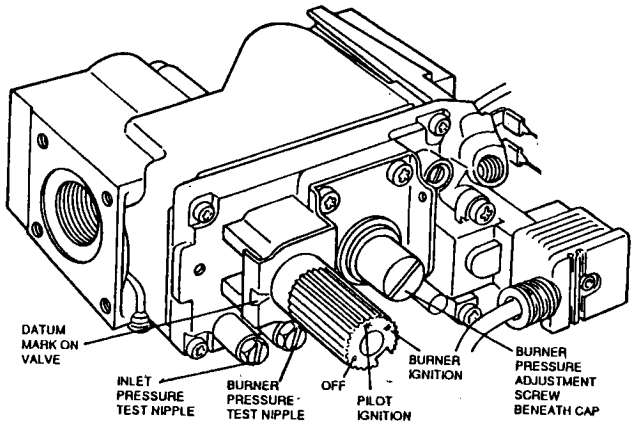

Figure 19 GAS CONTROL VALVE

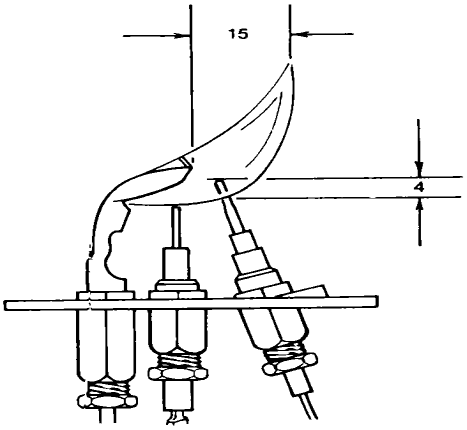

Figure 20 PILOT BURNER

Pilot Burner

The pilot burner pressure is non-adjustable. The pilot flame should heat the thermocouple so that the pilot safety device is “held in” but must not cause the thermocouple to glow bright red. Fig 20 illustrates the approximate size of a correct flame. The E.M.F. generated by the thermocouple should be of the order of 20-30 mV open circuit, 10-14 mV closed circuit. Due to the voltage drop in the overheat thermostat circuit there should be 6.5-8.5 mV closed circuit at the connection to the gas control valve. Drop out should occur between 1-3 mV closed circuit. If these conditions cannot be achieved check that the inlet pressure is 20 mbar See Fig 19 for inlet pressure nipple. If this is correct contact Potterton Myson.

Boiler Thermostat

At its minimum and maximum settings, the thermostat should control the water flow temperature at approximately 55ºC-82ºC (130ºF -180ºF). The thermostat has been calibrated by the makers and no attempt should be made to re-calibrate it on site. Turn the thermostat to the ‘O’ position and check that the main burner shuts down.

Pump Over-run Thermostat (Applicable on fully pumped systems only)

The over-run thermostat will keep the pump running when the boiler has shut down, as long as the combustion chamber is hot.

Overheat Thermostat
The overheat thermostat is pre-set and no adjustment is possible. It will require manual re-setting and the pilot re-lighting if an overheat condition occurs. The re-set button can be found on the front of the controls box. See Fig 2.

Spillage Detector Thermostat
The Spillage Detector Thermostat (S.D.T.) is a manual reset thermostat that will trip out if flue products spill from the down draught diverter.
If you have to keep resetting the thermostat, consult the fault finding chart on page 26, Fig 23.

Gas Control Valve
1) Main Solenoid
   Check the operation of the valve by turning off the electricity supply, either by the isolating switch or time control, where installed. The main burner must shut down immediately.
2) Flame Failure Valve
   Turn the gas control knob to the ‘off’ position. The pilot must shut down, and a “click” indicating thermocouple drop out, should be heard within 60 seconds.

External Controls
Check that any other external controls connected in the system such as time clocks and thermostats, control the boiler as required.

Users Instructions
A Users Instructions leaflet is provided with this boiler but the householder must have the operation of the boiler and system explained by the Installer. The householder must also be advised of the importance of annual servicing and of the precautions necessary to prevent damage to the system and building, in the event of the system remaining out of commission in frost conditions.

SERVICING INSTRUCTIONS - Page 21

Regular skilled servicing and cleaning of the appliance is essential to ensure continued safe and efficient operation. The frequency of cleaning will depend upon the particular installation conditions, and the use to which the appliance is put, but in general, once per year should be adequate.

It is the law that all gas appliances are installed and serviced by competent persons as stated in Gas Safety (Installation and Use) Regulations 1994.

Electrical installation and servicing should be carried out by a competent person in accordance with the I.E.E. Wiring Regulations.

For Health and Safety Information see back page.

Servicing is best arranged by a contract placed with Potterton Myson Limited and further details are available from the local Potterton Myson Service Department.

The boiler DATA PLATE and WIRING DIAGRAM are attached to the inside of the plastic controls cover. The boiler CODE NUMBER which should be quoted when ordering spares or requesting information is on the front of the control box.

The following notes apply to the boiler and its controls but it should be remembered that attention must also be paid to the heating circuit itself including radiator valves, thermostats, the time control and the expansion and feed water system. It is advisable to clean the boiler immediately after the end of the heating season.

In all cases prior to servicing, light up the boiler and check that the pilot and main burners have a clean, even flame and that the gas rate and main burner pressure is correctly set.

Before the start of any servicing work, switch off at the external electricity supply by disconnecting the plug at the socket or switching off external isolating switch. Turn off the gas service cock.

NOTE:
After completing any servicing or replacement of components check for gas soundness and carry out functional checks.

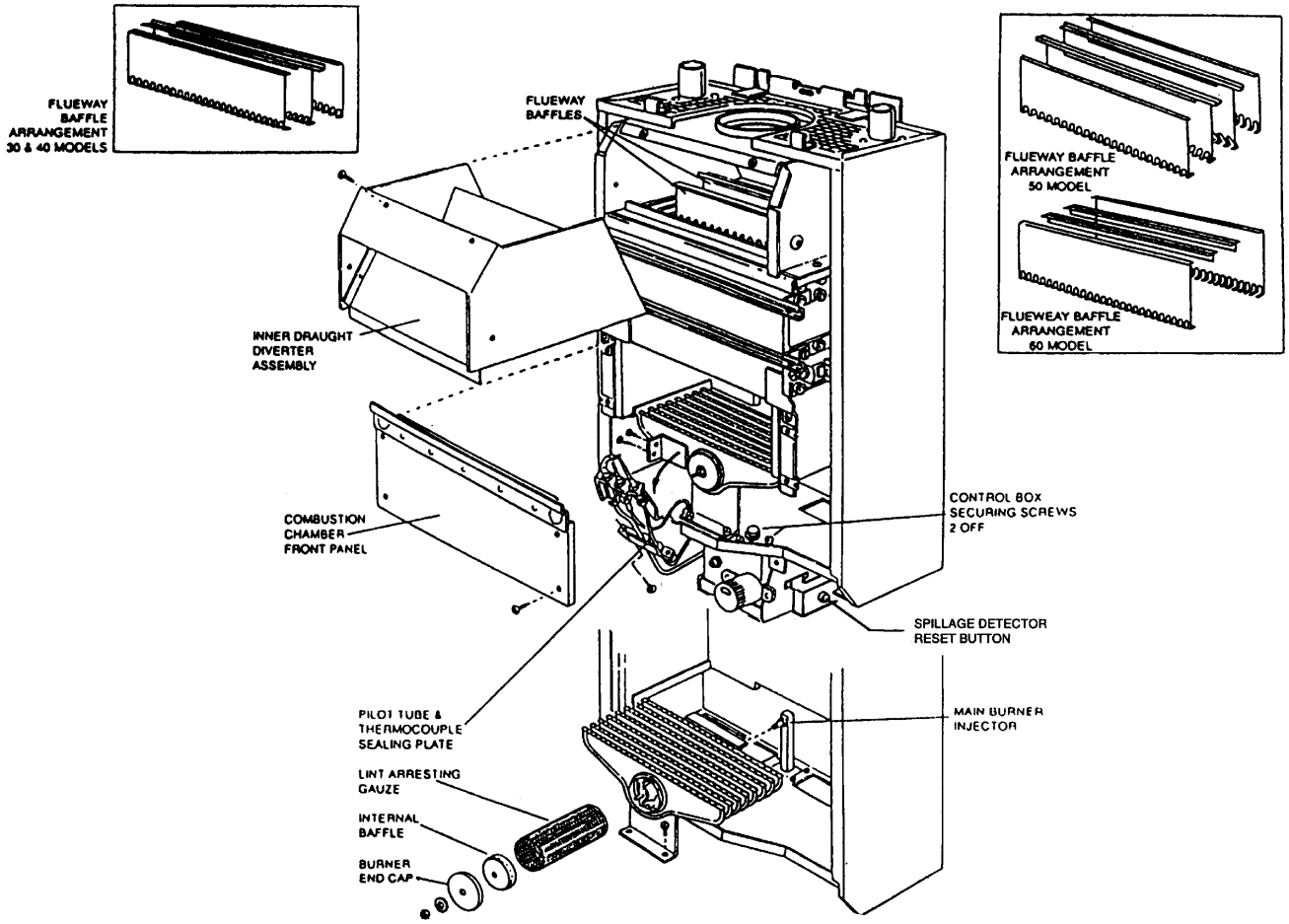

Figure 21 PREPARING THE BOILER FOR SERVICING

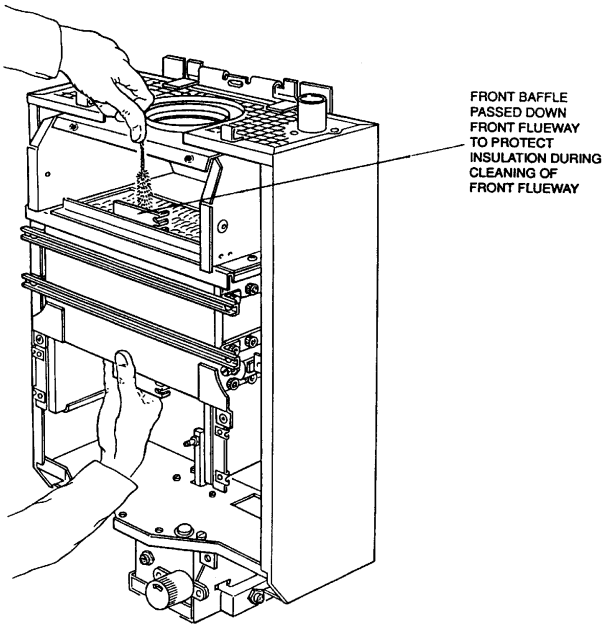

Figure 21B

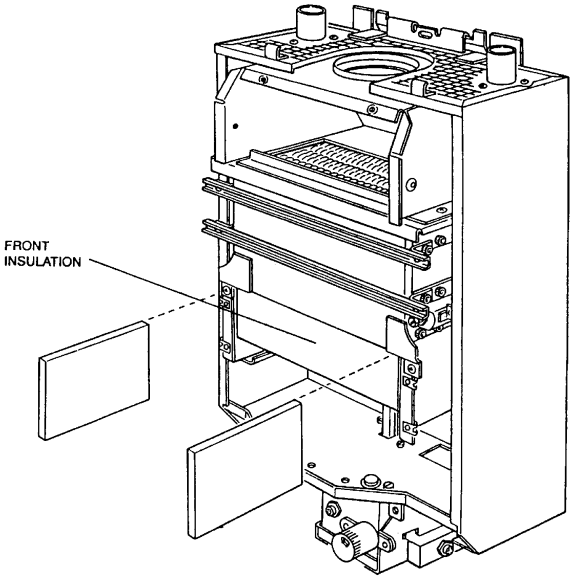

Figure 21C

1. PREPARING THE BOILER FOR SERVICING

See Fig 21

A. Switch off the external electricity supply by disconnecting the plug at the socket or switching off external isolating switch.
B. Remove controls cover by pulling it forward 25mm, lower it to release it from its four side fixings and pull forward clear of the thermostat knob.
C. Turn off the gas service cock.
D. Remove door by unscrewing lower fixing screws and lift door off the two upper hinge brackets.
E. Remove the four securing screws and withdraw the inner draught diverter assembly from the mouth of the draught diverter. See Fig 21.
F. Remove retaining clips and lift out baffles from flueways, there are 3 baffles in 30 & 40 models and 4 baffles in 50 & 60 models.
G. Remove four screws securing the lower combustion chamber front panel and remove panel.

2. MAIN BURNER REMOVAL AND CLEANING

A. Remove two screws securing pilot tube and thermocouple sealing plate to boiler base.
B. Remove two screws securing pilot to burner. Flex pilot assembly forward and down.
C. Remove two screws securing main burner to boiler base.
D. Slide main burner forward to disengage it from the rear injector and lift out main burner.
E. Unscrew the MS nut securing the burner cap and remove end cap. Withdraw the internal baffle and gauze from within burner. See Fig 21. Thoroughly clean the gauze using a brush or vacuum cleaner. Clean all deposits from the surface of the burner flame strip with soft brush or vacuum cleaner and ensure there is no fluff in the entry of the burner venturi.
F. Remove main burner injector and ensure the orifice is clean.
G. PILOT BURNER
The following operations are only necessary if the pilot flame is distorted or the wrong size, i.e. too small. Disconnect the electrode lead from the electrode, uncouple the thermocouple and pilot gas tube nuts at the base of the pilot assembly and lift out the pilot. Note, the pilot injector sits loosely on top of the pilot tube, or may be retained in pilot head itself. Remove and inspect the pilot injector for dirt deposits and clean if necessary. Likewise inspect and clean the electrode and thermocouple using a soft brush.

3. HEAT EXCHANGER

Working from above and below the heat exchanger use a suitable brush and remove all deposits from between the fins. When cleaning the front flueway protect the insulation inside the upper front panel by passing the front baffle into the flueway as illustrated in FIG. 21 B.

4. COMBUSTION CHAMBER INSULATION

Check the combustion chamber insulation for damage. If damaged replace as described under replacement.

5. REASSEMBLY

Refit the main burner ensuring it is correctly engaged onto the rear injector. Replacement of the other components is the reverse of removal. Ensure that the flueway baffles are refitted as illustrated in Fig 21 and the sealing plate and split grommets form a tight seal around the pilot tube and thermocouple capillary.

6. Follow the full commissioning procedure as detailed in the COMMISSIONING section of these instructions.

7. No further servicing is required on any other boiler mounted units. Repair is by replacement.

8. FAULT FINDING

Refer to fault finding chart Fig 23 and wiring diagram Fig 17.

9. REMOVAL/REPLACEMENT OF BOILER MOUNTED UNITS

MAIN BURNER

Refer to Fig 21 and carry out the following

A. Carry out operations A, B, C, D, G as described in section 1 PREPARING BOILER FOR SERVICE and operations A, B, C, D described in section 2 MAIN BURNER - REMOVAL AND CLEANING.
B. Replacement is the reverse of removal.
C. Follow the full commissioning procedure as detailed in the COMMISSIONING section of these instructions.

GAS CONTROL VALVE

A. Carry put operations A, B, C in section 1 PREPARING THE BOILER FOR SERVICE.
B. Unplug the electrical lead from the gas valve.
C. Disconnect the two blue wires from the thermocouple interrupter connections.
D. Disconnect the thermocouple lead from the interrupter connection on the gas valve.
NOTE: the interrupter connector is held in place by the thermocouple lead.
E. Disconnect the pilot tube at the gas valve.
F. Undo the union at the gas service cock.
G. Separate the gas control valve from the flange at the outlet port by removing the four securing screws.
H. Remove the screw securing the gas valve support bracket to the boiler.
I. Unscrew gas inlet assembly at valve and remove two M4 screws retaining valve support bracket. Fit both components to new valve.
J. Replacement is the reverse of the removal. Use new sealing gasket on reassembly.
K. Follow the full commissioning procedure as detailed in the COMMISSIONING section of these instructions

PILOT FILTER
The pilot burner is protected from blockage by a pilot filter situated within the gas control valve. The filter is large and designed to last the life of the gas control valve under normal operating conditions. It is therefore unlikely to need replacing. However in the event of pilot filter blockage being suspected the complete valve will need replacing.

THERMOCOUPLE
a Carry out operations A, B, C, D in section 1 PREPARING BOILER FOR SERVICE.
b Remove two screws securing pilot tube and thermocouple sealing plate to boiler base.
c Disconnect thermocouple lead from the interrupter connection on the gas control valve and at the pilot. NOTE: The interrupter connector is held in place by the thermocouple lead. Withdraw thermocouple from grommet, noting the route the lead takes so that the replacement can be routed in a similar manner to eliminate sharp bends.
d Replacement is the reverse of removal. Ensure on reassembly that the sealing plate and split grommets form a tight seal around the pilot tube and thermocouple capillary.

ELECTRODE
a Carry out operations A,B,C,D in section 1 PREPARING BOILER FOR SERVICE.
b Pull off electrode lead from electrode.
c Unscrew the nut securing the electrode to the pilot and withdraw electrode.
d Replacement is the reverse of removal.

COMBUSTION CHAMBER INSULATION
a To remove the insulation from the combustion chamber sides, rear and lower front panel carry out operations A,B,C,D,G in section 1 PREPARING BOILER FOR SERVICE. If the insulation is to be removed from the upper front panel the main burner will also need to be removed as described under MAIN BURNER REMOVAL & CLEANING, operations A,B,C,D.
b The side insulation panels are removed by sliding them from their retaining chanels.
c Once the side insulating panels have been removed the rear insulation can be lifted out and the upper front insulation can be slid downwards from inside the panel.
d The lower front insulation is removed by bending back the retaining tabs. Replacement is the reverse of removal. Follow the full commissioning procedure as detailed in the COMMISSIONING section of these instructions.

SIGHT GLASS
WARNING: GREAT CARE SHOULD BE TAKEN WHEN HANDLING AND DISPOSING OF A BROKEN SIGHT GLASS.
a Carry out operations A,B,C,D in section 1 PREPARING BOILER FOR SERVICE.
b Remove three M4 nuts from sight glass retainer and remove sight glass assembly.
c Replacement is the reverse of removal taking care that the clear circle in the sight glass lines up with the hole in the combustion chamber door. NOTE: new gaskets must be used when sight glass is fitted.

ELECTRODE LEAD
a Carry out operations A,B,C,D in section 1 PREPARING BOILER FOR SERVICE.
b Remove rear locking nut securing spark generator to its mounting bracket, withdraw spark generator and pull off electrode lead. Pull off electrode lead from electrode. Remove the split grommet and withdraw the electrode lead through the hole in the boiler base.
c Replacement is the reverse of removal.

SPARK GENERATOR
a Carry out operations A,B,C in section 1 PREPARING BOILER FOR SERVICE.
b Pull off electrode lead from spark generator, remove rear locking nut securing spark generator to its mounting bracket and withdraw spark generator.
c Replacement is the reverse of removal.

PUMP OVER-RUN THERMOSTAT
a Carry out operations A,B,C,D in section 1 PREPARING BOILER FOR SERVICE.
b Remove control box securing screw and lower control box.
c Access to the pump over-run thermostat is made easier by separating the upper assembly of the control box from the boiler base. This is done by removing the two hexagonal head screws identified in Fig 21 Tilt the upper assembly and disconnect the electrical wiring from the thermostat as follows:-
Black from terminal 1
Red from terminal 2
Brown from terminal 3
d Replacement is the reverse of removal.
e Follow the full commissioning instructions as described in the COMMISSIONING section of these instructions.

BOILER THERMOSTAT
a Carry out operations A,B,C,D in section 1 PREPARING BOILER FOR SERVICE.
b Remove control box securing screw and lower control box.
c Pull off the outer thermostat knob.
d Remove inner thermostat post by undoing the two securing screws
e Access to the boiler thermostat is made easier by separating the upper assembly of the control box from the boiler base. This is done by removing the two hexagonal head screws identified in Fig. 21.Tilt the upper assembly and disconnect the electrical connections from the rear of the thermostat as follows:-
White from terminal 3
Brown from terminal 2
Refer to Figs 17 & 18.
f Remove the nut securing the thermostat to the control box.

g Remove the split pin retaining the thermostat bulb and withdraw bulb from its pocket.
h Remove split grommet in the base of the boiler and the split grommet from the side of the control box, and feed thermostat capillary and bulb through holes.
I Replacement is the reverse of removal. The bulb of the new thermostat should be coated with heat conducting paste. Ensure the split grommet in the base of the boiler makes a good seal around the capillary.
j Ensure that the capillary is secure in the clips provided. Follow the full commissioning procedure as detailed in the COMMISSIONING section of these instructions.

SPILLAGE DETECTOR THERMOSTAT

a Carry out operation A,B,C,D,E in section 1 PREPAIRING BOILER FOR SERVICE.
b Remove the sensor from the support clips in the down draught diverter and carefully remove the capillary from the support clips on the front edge of the casing.
c Carefully dislodge the split grommet from the base of the boiler and feed the capillary and bulb through the hole.
d Access to the spillage detector thermostat contacts is carried out by separating the thermostat housing from the control box see Fig 22. This is done by removing the securing screw (identified in Fig 18a) and lowering the housing.
e Remove the two leads from the S.D.T. (Polarity is not important).
f Remove the thermostat fixing nut then remove the thermostat complete with its capillary and two split grommets from the control box slots
g Replacement is the reverse of removal, fit the two split grommets to the new thermostat capillary, carefully bend the new capillary to match the contour of the disconnected one.
h Ensure that the capillary is routed away from hot metallic surfaces (see Fig 18a) and the sensor bulb is located centrally between the two locating clips. Also ensure that the location pin of the thermostat is properly located before tightening the locking nut.
i Make sure the split grommet in the base of the boiler makes a good seal around the capillary.
j Follow the full commissioning procedure as detailed in the COMMISSIONING section of these instructions

OVERHEAT THERMOSTAT

a Carry out operations A,B,C,D in section 1 PREPARING BOILER FOR SERVICE.
b Remove control box securing screw and lower control box.
c Access to the overheat thermostat is made easier by separating the upper assembly of the control box from the boiler base. This is done by removing the two hexagonal head screws identified in Fig.21. Tilt the upper assembly and disconnect the two push-on electrical connections from the overheat thermostat terminals.
d Remove the nut securing the thermostat to the control box.
e Remove clip securing the thermostat bulb to the pipe.
f Remove split grommet in the base of the boiler and the split grommet from the side of the control box and feed thermostat capillary and bulb through holes.
g Replacement is the reverse of removal. The bulb of the new thermostat should be coated with heat conducting paste. Ensure the split grommet in the base of the boiler makes a good seal around the capillary.
h Ensure that the capillary is secure in the clips provided. Follow the full commissioning procedure as detailed in the COMMISSIONING section of these instructions.

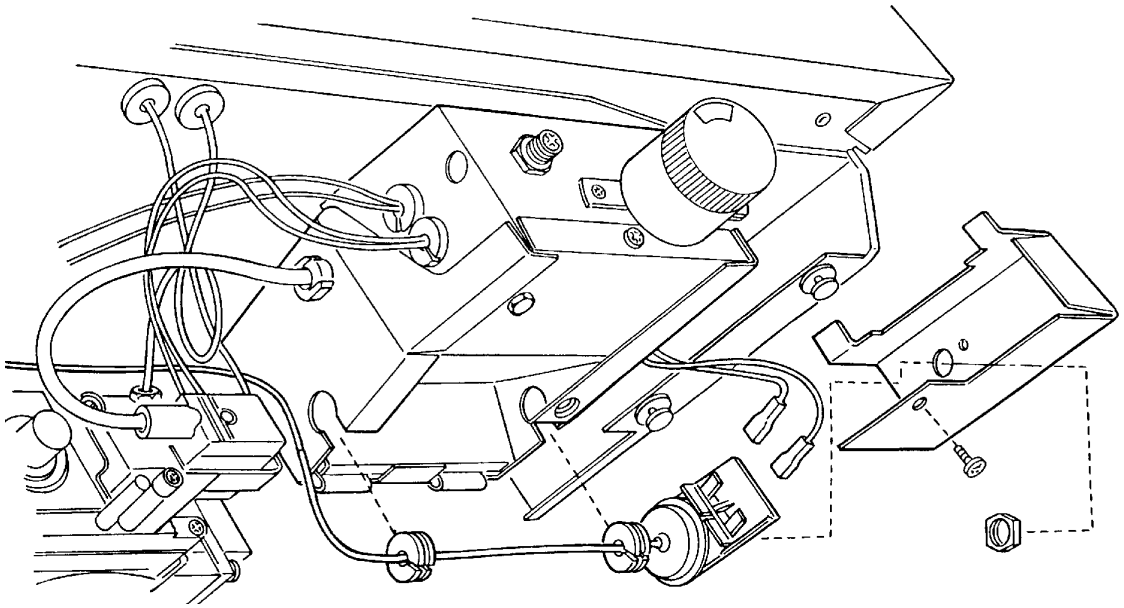

Figure 22

Figure 23 FAULT FINDING CHART

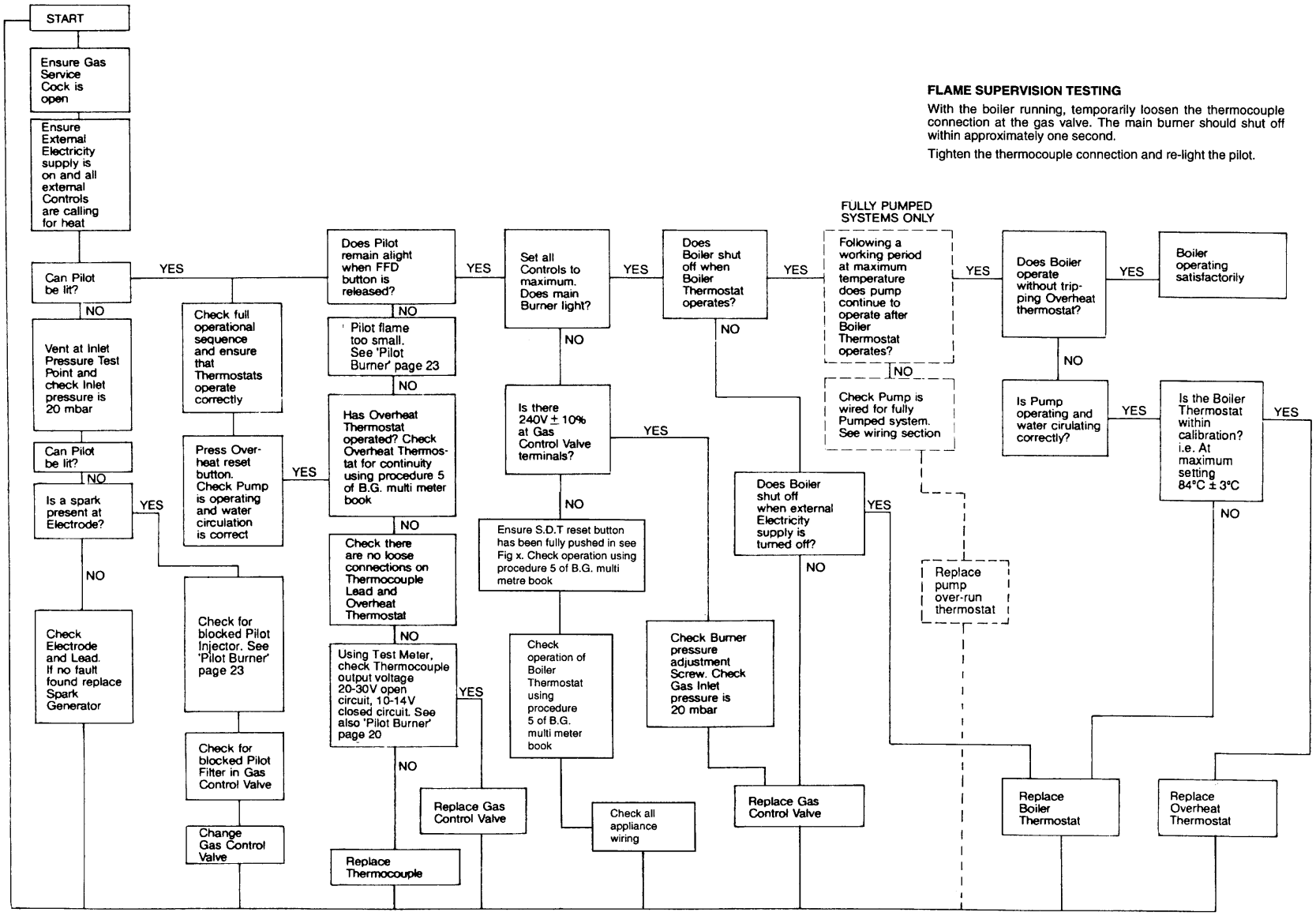

FLAME SUPERVISION TESTING

With the boiler running, temporarily loosen the thermocouple connection at the gas valve. The main burner should shut off within approximately one second.

Tighten the thermocouple connection and re-light the pilot.

SHORT PARTS LIST - Page 27

Key No		PM Part No	G.C. Part No
1	Pilot and electrode assembly S.I.T. (inc. items 2 - 6)	907241	337 816
2	Pilot injector, 0.27mm S.I.T.	402892	395 674
3	Olive	402949	386 770
4	Tube nut	402948	386 771
5	Electrode	402885	395 720
6	Electrode securing nut	402886	336 974
7	Thermocouple, S.I.T.	402918	381 713
8	Gas Control valve, S.I.T. NOVA	402974	378 496
9	2.6mm Burner Injector 30C boiler	410989	338 516
	3.1mm Burner Injector 40C boiler	410990	338 517
	3.55mm Burner Injector SOC boiler	410994	289 120
	3.8mm Burner Injector 60C boiler	410993	338 520
10	Overheat Thermostat, RANCO	404509	378 501
11	Boiler Thermostat, RANCO K36	404510	378 550
12	Spark Generator VERNITRON	407693	382 887
13	Boiler Thermostat knob	225251	338 445
14	Flue Brush (optional extra)	212154	337 526
15	Pump Over-run Thermostat, THERMODISO	404519	173 061
16	Electrode lead	497722	338 515
17	Ranco spillage detector thermostat	404523	

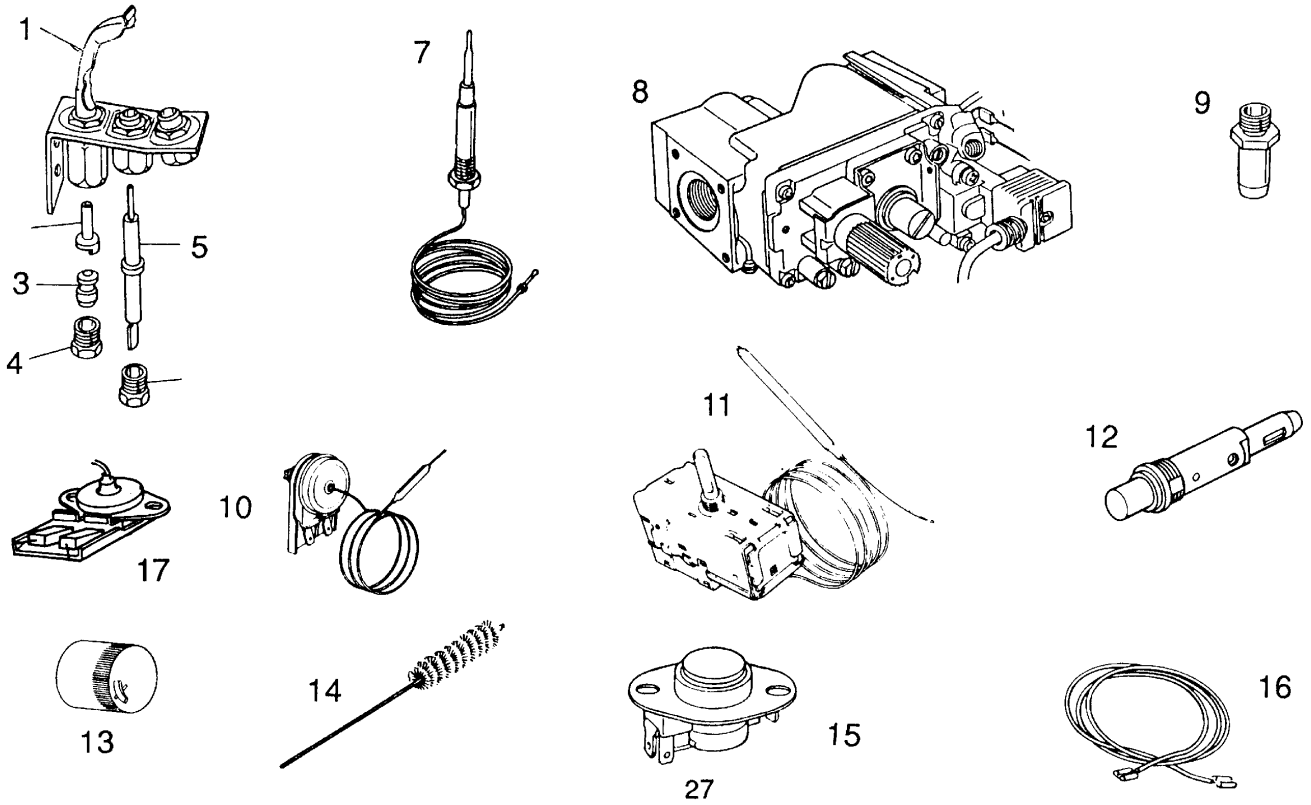

HEALTH AND SAFETY INFORMATION FOR THE INSTALLER AND SERVICE ENGINEER - Page 28

Under the Consumer Protection Act 1987 and section 6 of the Health and Safety at Work Act 1974, we are required to provide information on substances hazardous to health.
Small quantities of adhesives and sealants used in the product are cured and present no known hazards.
The following substances are also present.

Insulation & Seals

Material	-	Ceramic Fibre; Alumino - Silicone Fibre
Description	-	Boards, Ropes, Gaskets
Known Hazards	-	Some people can suffer reddening and itching of the skin. Fibre entry into the eye will cause foreign body irritation. Irritation to respiratory tract
Precautions	-	People with a history of skin complaints may be particularly susceptible to irritation. High dust levels are only likely to arise following harsh abrasion. In general, normal handling and use will not present discomfort, follow good hygiene practices, wash hands before consuming food, drinking or using the toilet
First Aid	-	Medical attention must be sought following eye contact or prolonged reddening of the skin.

Thermostat

Material	-	Contains very small quantities of xylene
Description	-	Sealed phial and capillary containing liquid
Known Hazards	-	Irritating to skin, eyes and throat. Vapour is harmful Inflammable - do not extinguish with water
Precautions	-	Do not incinerate Avoid contact with broken/leaking phials. Do not purposely puncture
First Aid	-	Eye/skin contact, wash with clean water, seek medical attention

Back Page

Publication No. 560018/1196

POTTERTON

USER'S GUIDE

Prima 30C, 40C, 50C & 60C

THIS APPLIANCE IS FOR USE ON NATURAL GAS ONLY.

IT MUST BE INSTALLED AND SERVICED BY A COMPETENT PERSON AS STATED IN THE GAS SAFETY (INSTALLATION AND USE) REGULATIONS 1994

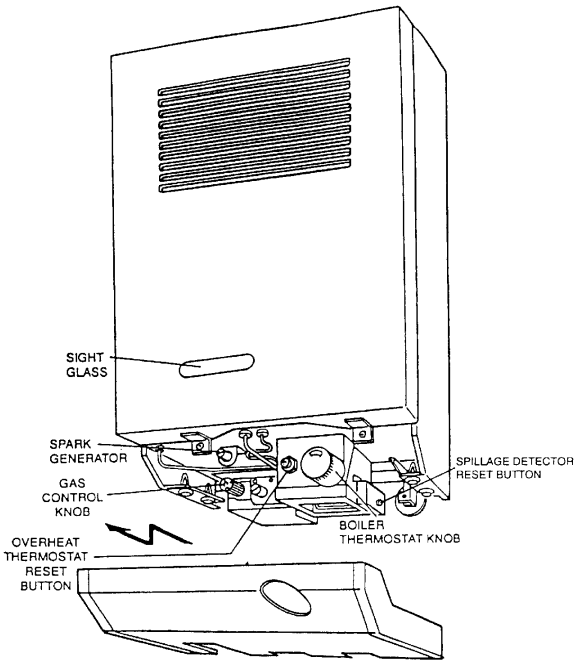

INTRODUCTION

The information given on this card will help you to obtain the maximum comfort from your boiler with the minimum trouble and cost. Once the pilot is lit your boiler is fully automatic in operation and requires very little attention apart from setting the thermostat. Regular skilled servicing is required to maintain the safe and efficient operation of your boiler throughout its long working life. Further information on this subject is given at a later stage.

ELECTRICITY SUPPLY

WARNING: THIS APPLIANCE MUST BE EARTHED

Connection shall be made to a 240V ~ 50 Hz AC supply. The appliance must be protected by a 3 amp fuse. If a 13 amp (BS1363) plug is used or if any other type of plug is used by a 5 amp fuse in the circuit.

GAS CONTROL KNOB DETAILS

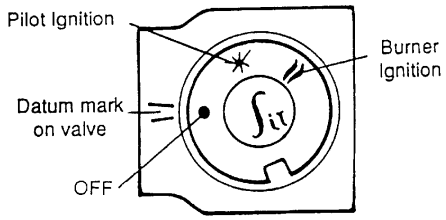

SAFETY
This appliance must at all times be fitted more than 100mm (4in) above floor level.
The boiler should have the following minimum clearances for Safety and Maintenance, 610mm (2ft) at the front of the boiler, 5mm (3/l6in) each side, 100mm (4in) at the bottom, 100mm (4in) at the top. If the appliance is installed in a compartment, do not obstruct any purpose-provided ventilation openings and do not use for storage purposes.

Flammable materials must not be stored in close proximity to the boiler.

Ensure that the flue terminal outside the house does not become obstructed, particularly by foliage.

THE BOILER THERMOSTAT
The boiler thermostat enables you to control the temperature of the water as it leaves the boiler and it is also used for turning the boiler on and off. The thermostat knob can be set to O (OFF), Min, 1,2,3,4,5 or Max. The graduations Min. to Max. correspond approximately to a temperature range of 55°C to 82°C (130°F - 180°F).

During the summer months, when the boiler is only being used to supply stored domestic hot water and there is no independent hot water temperature control, the thermostat can be set to position 1 or 2 which will probably be hot enough for bathing or washing up requirements. For washing clothes, a higher setting may be necessary.

In winter weather, when central heating is required, the thermostat knob can be turned up higher but it must be remembered that unless the temperature of the water in the domestic hot water cylinder is independently controlled, the stored hot water could be at a temperature that could scald, i.e. about 82°C
(180°F).

OTHER CONTROLS
A Potterton Electronic Programmer or other type of clock may have been fitted in your system, together with room and/or cylinder thermostats. Full instructions on the use of these controls should be supplied with them.

LIGHTING THE BOILER

1. Remove controls cover. This is done by pulling it forward by 25mm, lowering by 10mm to release from side fixings and lifting clear of the thermostat knob. See illustration on page 1.
2. Switch ‘ON’ the main electricity supply and ensure that the boiler thermostat knob is in the ‘O’ position.
3. Ensure the electronic programmer or other time control, if fitted is in an ‘ON’ period (refer to time control literature).
4. Ensure that any room or cylinder thermostats are at a high temperature setting.
5. Partly depress and turn the gas control knob clockwise as far as possible to position ● (see knob details). This ensures the valve is In the‘OFF’ condition.
6. Partly depress and turn the control knob anti- clockwise to the pilot ignition position (see knob details) and hold it whilst pressing and releasing the spark generator button several times. Continue to hold in the gas control knob, look through the pilot sight glass and check that the pilot has lit. (On initial lighting after a long period out of use the pilot may take several attempts to light). When lit, continue to hold in the gas control knob for about 15 seconds, release knob and the pilot should remain alight. Partly depress and turn the gas control knob to the burner ignition symbol (see knob details).
   NOTE:
   If the pilot fails to light or goes out at any time, partly depress and turn the control knob clockwise to the ‘OFF’ position, release and WAIT THREE MINUTES before attempting to relight. (If the pilot goes out having released the knob during the lighting procedure, hold in the knob for a little longer after lighting the pilot on the re-light attempt).
7. Turn the boiler thermostat knob clockwise to a high setting and the main boiler will light.
8. Set the boiler thermostat and the room and/or cylinder thermostat(s) and any time control, to their required operating conditions. Refit controls cover.
   NOTE: When the boiler is first lit, there may be a slight smell. This will disappear with use.

TO SHUT THE BOILER OFF
Short periods: Switch off the time control. Where no time control is fitted, turn the boiler thermostat to ‘O’. To re-light the boiler, simply switch on the time control or boiler thermostat.
For longer periods: Turn off the time control, if fitted; turn off the boiler thermostat, then partly depress and turn the gas control knob clockwise as far as possible and release it. Switch off the main electricity supply. To re-light the boiler, follow the full procedure
‘LIGHTING THE BOILER’.

NOTE: If the system is fitted with a low limit thermostat and protection of the system is required during cold weather, all that is required is for the programmer to be turned to the ‘OFF’ position. This will allow the boiler to cycle if the temperature in the house becomes too low.

IMPORTANT

Gas and electricity are required to operate your boiler. Its performance will not be affected by normal variation in gas or electricity supply, but a gas failure will put the boiler out of operation and it should be re-lit in the normal manner. In the case of a failure of the electricity supply, the boiler will re-light automatically when the supply is restored, provided that the time clock and/or thermostats are in an ‘ON’ position, i.e. the pilot normally remains alight without an electrical supply. See also Overheat Limit Thermostat.
In the event of your boiler not working, there are several checks you should carry out before calling in a service engineer, as this could save you unnecessary expense.

1 Check that the gas, electricity and water are all turned on at the main supply.
2. Check that the time control, if fitted, is in an ‘ON’ period.
3. Check that all the thermostats in the system are not on low settings.

4. Check that the Spillage Detector Thermostat reset button has been reset, i.e. pushed fully in (see boiler sketch).
   If you have to keep resetting the thermostat, call in your local service engineer.

   Overheat Limit Thermostat
   The boiler is fitted with a safety thermostat to protect against overheating of the water. Should this device operate, both the pilot and main burner are extinguished.
   Access to the reset button is achieved by removing the controls cover as described under
   'LIGHTING THE BOILER'.
   To restart, allow the boiler to cool, press in the overheat thermostat reset button and follow the full procedure 'LIGHTING THE BOILER'.
   If problem persists, turn off the boiler and consult your local Gas Region or Service Engineer.
   NOTE: Interruption of the electrical supply to the boiler may also cause the overheat thermostat to operate.

Having checked these points and if the boiler still fails to light, call in your local Service Engineer.

Spillage Detector Thermostat
The Spillage Detector Thermostat (S.D.T.) is a manual reset thermostat that will trip out if flue products spill from the down draught diverter.
If you have to keep resetting the thermostat, call in your local service engineer.

FROST PRECAUTIONS

If your boiler has to be shut down for several hours or more during very cold weather, it may be in danger of freezing, due to its position, i.e. it may be in an outhouse or part of the pipework may be vulnerable to frost. To avoid freezing, three methods of protection can be used:-

1. Insulation of the boiler and pipework, taking care not to impede any ventilation air supply.
2. Completely draining the water system if not in use for long periods. If the boiler is installed on a sealed system, draining and refilling must be carried out by a competent person, e.g. your Service Engineer. NOTE: Although the system can be emptied by using the drain-off taps installed in the pipework around the system, to empty the boiler it is necessary to remove the drain plug situated on the front lower right of the casting. This operation is best left to your Service Engineer.
3. Having a low limit thermostat fitted. Seek advice from your installer.
   If a low limit thermostat has been fitted, it cannot operate if the boiler is completely shut down and the electricity supply turned off. In this instance, the system will have no protection and one of the other methods must be used.
   If no protection is provided it may be necessary to run the boiler at low thermostat settings at times when it would normally be shut off.

CLEANING THE OUTSIDE OF THE BOILER CASING
The outside of the boiler casing can be wiped when necessary by using a damp cloth to remove finger marks etc. Do not use an abrasive as this may damage the casing finish.

CARE OF YOUR BOILER AND SYSTEM DURING THE GUARANTEE PERIOD AND BEYOND

See Back Page

1. Registration of Purchase

It is important to register the purchase of your Potterton boiler to ensure you receive prompt and efficient handling in the event your boiler requires attention during the guarantee period.

To register your guarantee simply complete and detach the Registration of Purchase form enclosed with these instructions. It is important to include details of your installer (if known) and to return the completed form to the Potterton Registration Department.

2. During the Guarantee Period

In the event of any problems with your system or the operation of your boiler, you should first call your installer. If there is a fault with the boiler under guarantee which your installer is unable to rectify, he will call Potterton Service Operations. For 12 months after the date of installation of the boiler (or 18 months from the date of manufacture, whichever is the shorter), Potterton will attend to any manufacturing defect, on the appliance only (not the system or ancillary controls), free of charge for parts and labour, subject to there being no misuse or abuse. This does not affect your statutory rights.

Service visits by Potterton Service Operations outside the terms of the boiler guarantee will be charged for both parts and labour at our normal rates for chargeable work.

During the period of the boiler guarantee, Potterton will only be responsible for the costs of work done by them or on their instructions by their Agent. We cannot accept any liability for expenditure or work done by other parties without our knowledge and/or approval.

3. Safety Check/Routine Maintenance

It is strongly recommended you have your boiler checked annually for safety and to have routine maintenance. This should be carried out by a CORGI Registered Installer/Service Agent or Potterton Service Operations to comply with the requirements of the Gas Safety (Installation and Use) Regulations 1994.

4. Boiler Breakdown Insurance

We are pleased to offer you the opportunity to protect your investment once your boiler guarantee has expired, by the payment of an annual premium. You can continue with this insurance for the normal life of your boiler and you will find a special 30 day introductory offer for second year cover together with a card to register your purchase, as part of the ‘User Pack’ supplied with your boiler.

If you have not been handed a Registration Card/Optional 2nd Year Breakdown Insurance Offer, please contact the Potterton Registration Department for a copy by telephoning 0181 944 4972

POTTERTON

PROFILE Prima

30e, 40e, 50e, 60e, 80e & 100e fanned balanced flue gas fired boilers

THIS APPLIANCE IS FOR USE WITH NATURAL GAS ONLY

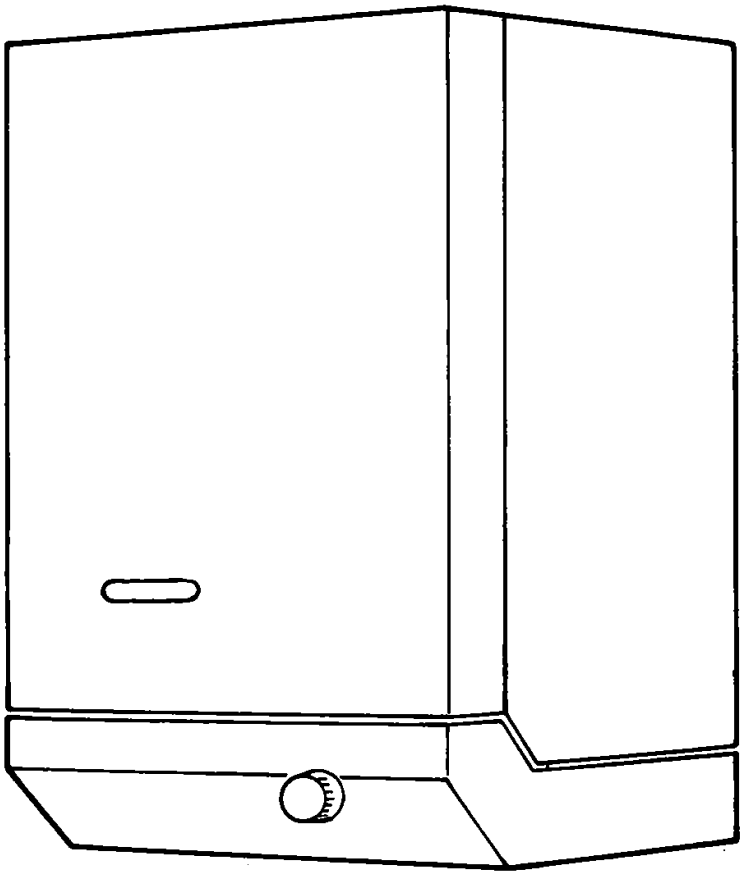

Installation and Servicing Instructions

LEAVE THESE INSTRUCTIONS ADJACENT TO THE GAS METER.

POTTERTON PROFILE PRIMA 30. G.C. No. 41.605.70
POTTERTON PROFILE PRIMA 40e G.C. No. 41.605.71
POTTERTON PROFILE PRIMA 500 G.C. No. 41 .605.72
POTTERTON PROFILE PRIMA 60e G.C. No. 41 .605.73
POTTERTON PROFILE PRIMA 80. G.C. No. 41.605.74
POTTERTON PROFILE PRIMA 100. G.C. No. 41.605.75

IMPORTANT

This appliance must be installed and serviced by a competent person as stated in the Gas Safety (Installation and Use) Regulations 1984.
Profile Prima boilers are certified by BSI for safety, it is therefore important that no external control devices (e.g. flue dampers, economisers, etc.) be directly connected to these appliances unless covered by these installation instructions or otherwise recommended in writing. Any direct connection of a control device not approved by Potterton could invalidate the BSI certificate and the normal warranty.

LIST OF CONTENTS

GENERAL - Page 2

Profile Prima boilers are fully automatically controlled, wall mounted, fan powered, balanced flue appliances, using a cast iron heat exchanger and are available in six outputs ranging from 5.86 - 29.3 kW (20,000—100,000 Btu/h).
The boilers which are designed to provide domestic hot water and/or central heating must be used on INDIRECT FULLY PUMPED systems only, which may be sealed or open vented.
The boilers can be supplied with either of the following types of flue system:
Standard horizontal flue system which is suitable for a wall thickness of 100mm (4in) to 510mm (20in).

PRIMA 100E MODEL ONLY
1 metre horizontal flue system which provides a maximum flue length of 955mm (37in).
Vertical flue system which allows the flue to pass through a flat roof and terminate at a maximum height of 980mm (38in) measured from the top of boiler case.
PRIMA 30E, 40E, 50E, 60E & 80E Models only
2 metre horizontal flue system which provides a maximum flue length of 1955mm (77in).
Vertical flue system which allows the flue to pass through a flat roof and terminate at a maximum height of 1980mm (78in) measured from the top of boiler case.

OPTIONAL EXTRAS - Page 2

The following are kits available as optional extras:- Internal

Internal Fitment Kit, which is suitable for a maximum wall thickness of 510mm (20 in.) is to be used where access to the outside wall is impracticable.

Terminal Guard, to be used when the terminal is fitted less than 2m above a balcony, above ground or above a flat roof to which people have access.

Full fitting instructions are provided with each kit.

Pump Cover Kit, located on top of the boiler and is designed to conceal the pump, and/or any motorised valves installed above the boiler. (Note: Pump cannot be fitted above the boiler if the vertical flue kit is used).

Terminal Wall Plate, where necessary can be fitted to the outside wall face to improve the appearance, after making good around the terminal.

PART Nos

	30e&40e	50e	60e	80e	100e
Standard Flue System	213040	213040	213041	213041	213042
1 metre Flue System	N/A	N/A	N/A	N/A	212857
2 metre Flue System	213043	213043	213044	213044	N/A
vertical Flue System	213046	213047	213048	213049	212830
Terminal Wall Plate	212306	212306	212280	212280	212280
Terminal Guard	205792	205792	205792	205792	205792
Internal Fitment Kit	213058	213058	213059	213059	213059
Pump Cover Kit	213056	213056	213056	213057	213057

ACCESSORIES - Page 3

The following range of Potterton system controls are also available and further information will be provided on request.

Electronic Programmer E.P. 2001, EP. 3001, E.P. 4001, E.P. 6000.

Programmable Electronic Thermostat PET 1.

Thermostatic Radiator Valve Myson

Electronic Cylinder Thermostat PTT2

Electronic Room Thermostat PRT2

Spring Return Zone Valve PMV2

Spring Return Diverter Valve PMV3

INSTALLATION DATA - Page 3

The installation of the boiler must be in accordance with the latest relevant requirements of the Gas Safety (Installation and Use) Regulations 1984, local building regulations, IEE Wiring Regulations and the Bye laws of the Local Water Undertaking. Detailed recommendations are contained in the following British Standards and Codes of Practice.

BS6798, BS5440 Part 1

BS5440 Part 2 BS5449 Part 1
BS5546 BS4814 BS6891
BUILDING REGULATIONS 1985.
MODEL WATER BYELAWS.
BRITISH GAS PUBLICATION DM2.
GAS SAFETY (INSTALLATION AND USE) REGULATIONS 1984.
BUILDING STANDARDS (SCOTLAND) REGULATIONS.

BOILER DIMENSIONS - Page 3

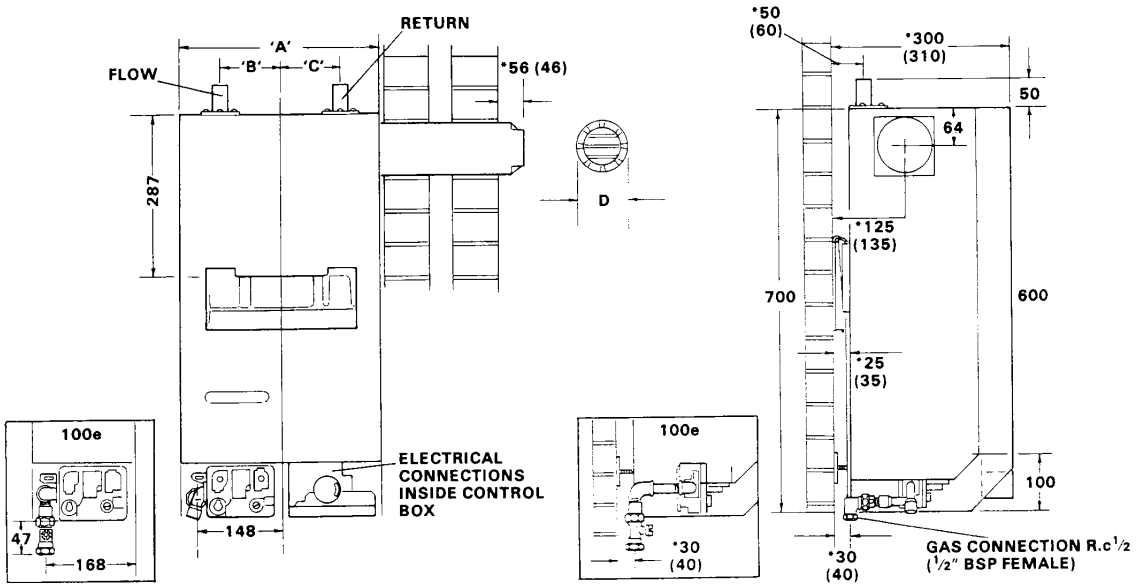

FIG. 1

Boiler		30e	40e	50e	60e	80e	100e
Dimension mm)	'A'	350	350	350	350	425	425
	'B'	110	110	110	110	150	150
	'C'	103	103	103	103	143	143
	'D'	90	90	90	107	107	107
Flow/Return connections		22 mm Copper	22 mm Copper	22 mm Copper	22 mm Copper	28 mm Copper	28 mm Copper

NOTE:

IF PIPEWORK IS TO BE RUN DOWN THE BACK OF THE BOILER THE NORMAL CLEARANCE OF 25mm BETWEEN THE REAR OF THE BOILER AND WALL CAN BE INCREASED TO 35mm IFOESIRED BY INVERTINGTHE BOILER MOUNTING PLATE DURING INSTALLATION

(Dimensions in brackets apply when the mounting plate is inverted).

SITE REQUIREMENTS - Page 3

These boilers are not suitable for external installation and should not be fitted directly above a cooking appliance. The boiler may be installed in any room, although particular attention is drawn to the requirements of the current I.E.E. Wiring Regulations and in Scotland, the electrical provisions of the Building Standards applicable in Scotland with respect to the installation of the appliance in a room containing a bath or shower.

Where a room-sealed appliance is installed in a room containing a bath or shower, any electrical switch or appliance control, utilising mains electricity should be so situated that it cannot be touched by a person using the bath or shower.

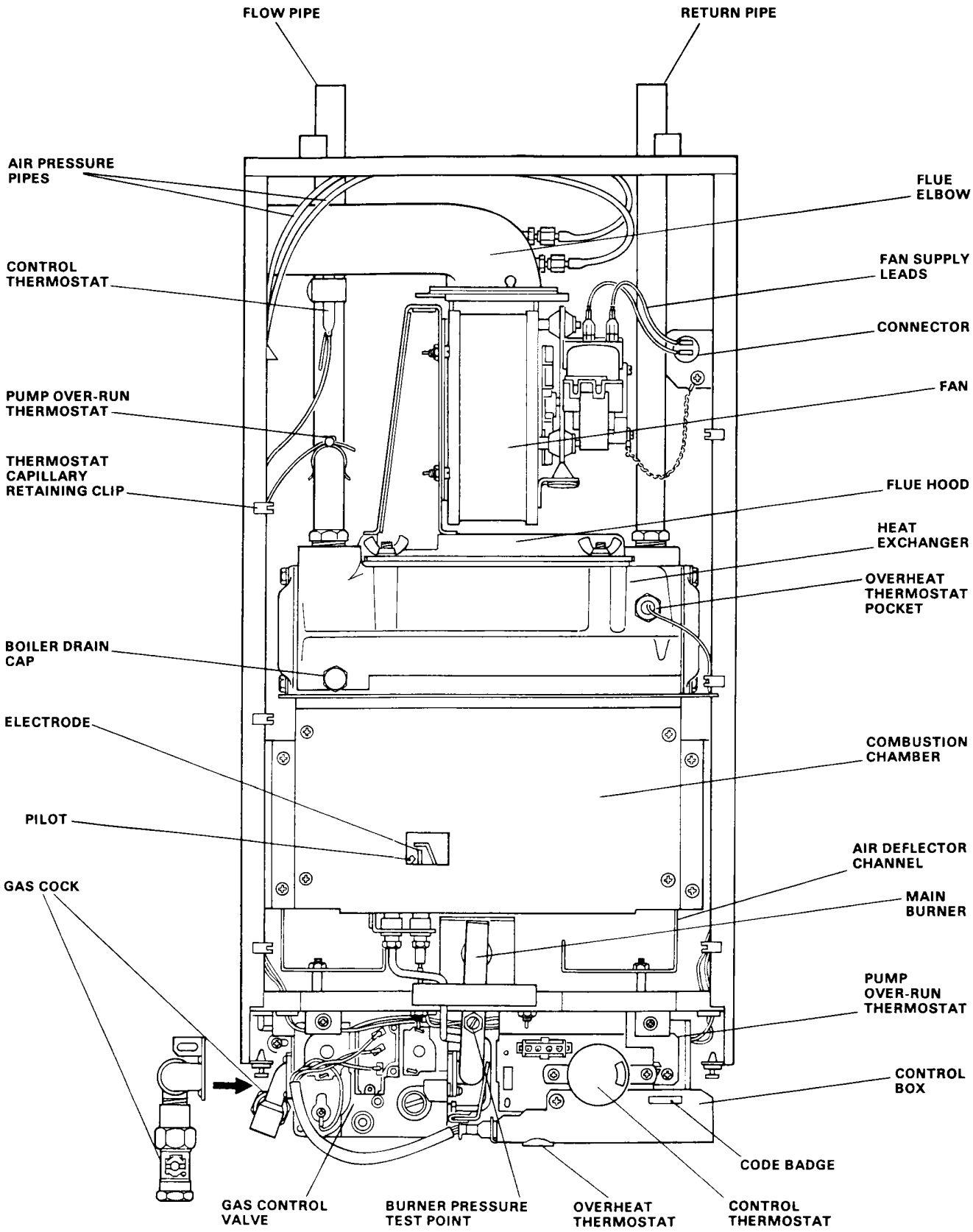

FIG. 2 GENERAL ARRANGEMENT

Where the installation of the boiler will be in an unusual location, special procedures may be necessary and BS 6798 1987 gives detailed guidance on this aspect.

Ensure that the gas supply pipe and meter are large enough for this appliance and any others that may be run off the same meter. Reference should be made to BS6891

Boiler Mounting Surface
The boiler must be mounted on a flat wall, which may be of combustible material and must be sufficiently robust to take the weight of the boiler. The requirements of the local authorities and the Building Regulations must be adhered to.

IMPORTANT NOTICE:
TIMBER FRAMED HOUSES
If the appliance is to be fitted in a timber framed building, it should be fitted in accordance with British Gas Publication DM2 'Guide for Gas Installations in Timber Framed Housing'. If in doubt, advice must be sought from the local Gas Region of British Gas.

Clearances Around the Boiler
The following minimum clearances must be maintained after installation, for correct operation and servicing of the boiler:

610mm (2 ft) at the front of the boiler

5mm (0.2 in) each Side of the boiler

50mm (2 in) at the top (measured from the top of the boiler case), except where the optional extra pump cover is to be fitted, when 178mm (7 in) should be allowed.

100mm (4 in) at the bottom of the boiler.

Additional clearances to these are required during installation for lifting the boiler and 127mm (5 in) is required at the top of the boiler for access to the pipe connections.

Ventilation
If the boiler is to be installed in a confined space such as a cupboard, the space will need ventilating. Openings must be provided at the top and bottom of the cupboard each of which should have a free area as shown in TABLE 1. Further details for installation of a boiler within a Compartment are given in BS 6798 1987.

TABLE 1

PROFILE PRIMA	AIR VENT AREAS	
	in^2	cm^2
30e	16	103
40e	21	135
50e	26	170
60e	32	206
80e	43	277
100e	54	349

If the openings draw air from outside the building the free areas may be halved. Refer to BS 5440 Part 2 1976 for further guidance.

Balanced Flue Terminal and Ducting
The fresh air inlet and flue ducts can be run from either the left, right, rear or top of the boiler to a miniature terminal on the outside of the building.

The minimum spacings from the terminal to obstructions and ventilation openings are shown in FIG. 3. For information appertaining to horizontal flue lengths reference should be made to FIG. 4.

If a terminal is fitted less than 2m above a balcony, above ground or above a flat roof to which people have access then a suitable terminal guard should be fitted. (P.I.L. No. 205792).

Refer to BS5440 Part 1 1978 for further guidance.

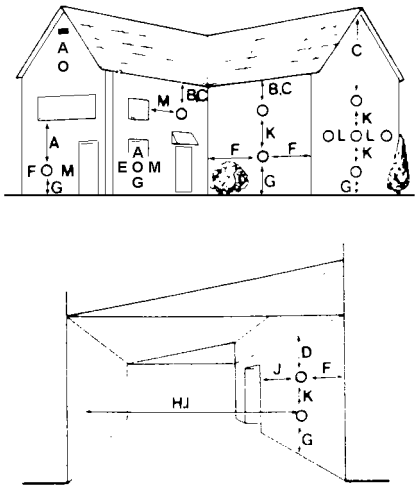

FIG. 3 THE SITING OF BALANCED FLUE TERMINALS

INFORMATION RELATING TO VERTICAL FLUING IS PROVIDED IN THE PACK CONTAINING THE VERTICAL FLUE SYSTEM.

NOTE
Where a flue terminal is fitted less than 1000mm from a plastic or painted gutter or 500mm from painted eaves, an aluminium shield of 1000mm length should be fitted to underside of gutter or eaves.

Any car port or other add-on extension should consist of a roof or a roof and one other wall. If it consists of a roof and two other walls - the installation shall be treated as suspect and further advice sought.

POSITION		MINIMUM DISTANCE
A.	DIRECTLY BELOW AN OPENABLE WINDOW, AIR VENT, OR ANY OTHER VENTILATION OPENING.	300
B.	BELOW GUTTER, DRAIN/SOIL PIPE	75
C.	BELOW EAVES	200
D.	BELOW A BALCONY OR CAR PORT ROOF	200
E.	FROM VERTICAL DRAIN PIPES AND SOIL PIPES	75
F.	FROM INTERNAL OR EXTERNAL CORNERS	300
G.	ABOVE ADJACENT GROUND OR BALCONY LEVEL	300
H.	FROM A SURFACE FACING THE TERMINAL	600
I.	FACING TERMINALS	1200
J.	FROM OPENING (DOOR/WINDOW) IN CARPORT INTO DWELLING	1200
K.	VERTICALLY FROM A TERMINAL ON THE SAME WALL	1500
L	HORIZONTALLY FROM A TERMINAL ON THE SAME WALL	1500
M.	ADJACENT TO OPENING	150

REAR OR SIDE FLUEING

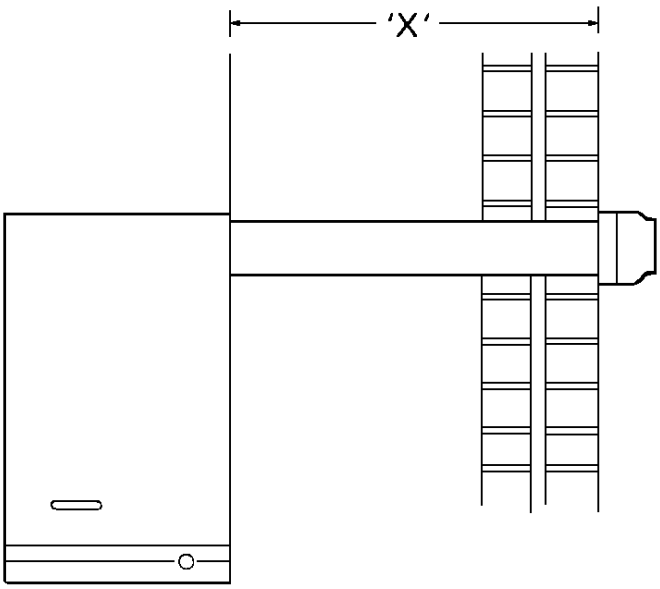

	MAXIMUM LENGTH 'X'
STANDARD FLUE SYSTEM	510 mm (20 in)
1 METRE FLUE SYSTEM 100e MODEL ONLY	955 mm (37 in)
2 METRE FLUE SYSTEM 30e, 40e, 50e, 60e & 80e MODELS ONLY	1955 mm (77 in)

FIG. 4 FLUE LENGTHS

ELECTRICITY SUPPLY

A 240 volts 50Hz, single phase electricity supply fused to 3 amperes, must be provided in accordance with the latest edition of the I.E.E. Wiring Regulations and any other local regulations that may apply. The current rating of the wiring to the boiler must exceed 3 amperes and have a cross sectional area of at least 0.75mm^2 in accordance with BS 6500. Table 16.

The supply to the boiler and its associated equipment should be controlled by a 3A fused double pole switch (having at least 3mm contact separation in both poles) so that complete isolation from the supply can be achieved to enable servicing work to be carried out in safety.

TECHNICAL DATA - Page 6

Maximum working head	30.5m (l00ft)
Minimum working head	150mm (6in)
Gas supply pressure	20 mbar
Maximum flow temperature	82^{0}C
Electricity supply	240v-50Hz fused at 3A
Internal Fuse	Type T1A
Power Consumption	80 Watts (excluding pump)
Gas supply connection	Rc. ½ (½ in BSP female)

	30e, 40e, 50e & 60e Models	80e & l00e Models
Appliance lift weight (mm)	26.0kg (57.3lbs)	33.5kg (73.871bs)
Appliance weight installed	37.1 kg (81 8lbs)	46.4kg (102.3lbs)
Water content	2.0 litre (0.44 gal)	2.4 litre (0.53 gal)
Flow/Return connections	22m copper	28mm copper

BOILER SIZE		INJECTOR SIZE	GAS RATE m^3/h (ft^3/h)	INPUT kW(Btu/h)	OUTPUT kW(Btu/h)	BURNER PRESSURE mbar	in wg
	Min		0.71 (25.23)	7.65 (26116)		3.9	1.6
30		2.9mm	0.87 (30.61)	9.29 (31686)		5.9	2.4
	Max		1.03 (36.23)	10.99 (37500)		8.6	3.5
	Min		1.06 (37.40)	11.35 (38710)		6.9	2.8
40		3.1mm	1.21 (42.86)	13.00 (44360)		9.1	3.7
	Max		1.37 (48.31)	14.65 (50000)		11.6	4.7
	Min		1.39 (49.11)	14.90 (50826)		8.0	3.2
50		3.5mm	1.54 (54.35),	16.49 (56250)		10.0	4.0
	Max		1.71 (60.39)	18.32 (62500)		11.6	4.7
	Min		1.73 (61.07)	18.53 (63211)		11.0	4.4
60		3.6mm	1.89 (66.84)	20.28 (69182)		13.0	5.2
	Max		2.05 (72.46)	21.98 (75000)		15.0	6.0
	Min		2.13 (75.19)	22.81 (77821)		7.2	2.9
80		4.4mm	2.43 (85.94)	26.07 (88945)		9.3	3.7
	Max		2.74 (96.62)	29.31 (100000)		11.8	4.7
	Min		2.78 (98.09)	29.75 (101523)		8.6	3.5
100		4.7mm	3.10 (109.38)	33.18 (113208)		10.7	4.3
	Max		3.42 (120.77)	36.64 (125000)		13.1	5.3

CIRCULATION PUMP SELECTION

The resistance through the heat exchanger when operating with a water flow rate producing an 11 ^{0}C temperature rise at maximum boiler output are shown in TABLE 2. If other controls, such as three-position valves are used in the system, the resistance through them, quoted in their manufacturer's literature must be taken into account. The pump may be fitted on either the flow or return and MUST be wired directly to the boiler terminal block, see FIG. 23. It must be fitted with two isolating valves which are positioned as close to the pump as possible. Closing of any valve must always leave the open vent unobstructed.

TABLE 2

Boiler size	Water Flow Rate		BOILER RESISTANCE	
	Litres/sec	gal. mm	kN/m^2	in wg
30e	.19	2.5	1.5	6.0
40e	.25	3.34	3.0	12.0
50e	.32	4.17	4.25	17.0
60e	.38	5.0	6.25	25.0
80e	.51	6.67	7.0	28.0
l00e	.64	8.4	11.0	44.0

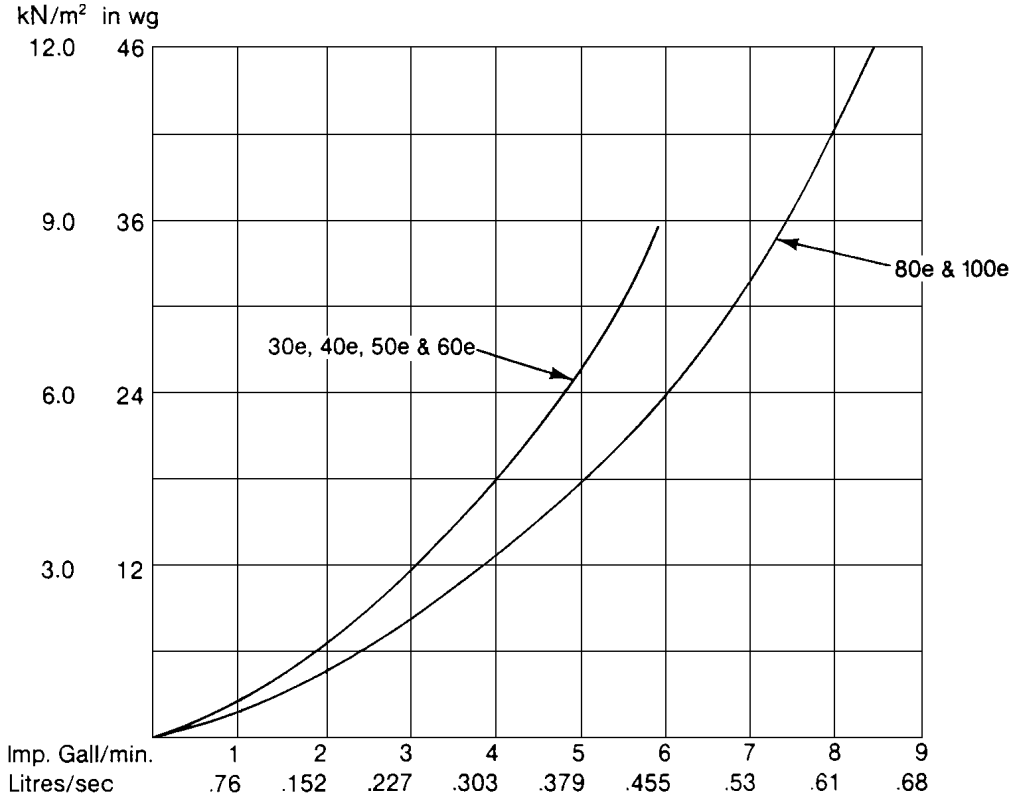

FIG. 5 PRESSURE LOSS ACROSS BOILER

The System

The boiler must be used on INDIRECT FULLY PUMPED systems only, which may be sealed or open vented.

The system should be designed so that the maximum static head does not exceed 30.5m (l00ft) and a minimum of 150mm (6in). See FIG 6.

On all systems the pump should be wired to the boiler terminal block, it will then be controlled by the pump over-run thermostat. This will ensure that the pump will continue to run after boiler shut down if the water temperature is high, thus preventing nuisance operation of the overheat thermostat.
It is important that where electrically operated zone valves are used the boiler is wired so it does not cycle when the zone valves are closed. Also, systems fitted with controls that close both hot water and central heating circuits while the boiler is still hot, must be fitted with a by-pass circuit to dissipate the residual heat from within the boiler.

If a three port diverter valve is used as shown in FIGS. 6, 7 a by-pass is not necessary since one circuit is always open.

Where a pair of two port valves are used, a by-pass is necessary. The total length of the by-pass circuit taken from the boiler connections should be greater than 4 metres of 22mm pipe. It should be fitted with a lockshield valve and be adjusted to maintain a minimum flow through the boiler of 4.5 litres/mm (1 gal/mm) see FIGS 6, 7.

Systems fitted with controls which allow the boiler to operate when both the hot water and central heating circuits are closed i.e. mechanically operated thermostatic control valves, must be fitted with a by-pass circuit capable of:-

1. Dissipating a minimum of 1 kW (3400 Btu/h).

2. Maintaining a minimum water flow through the boiler of 9 litres/mm (2 gal/mm).

A suggested method of meeting these requirements by using a bathroom radiator fitted with two lockshield valves is shown in FIGS. 6, 7.

Additional system information can be found in the Control Systems, Pipework and Wiring Guide.

Drain off taps should be fitted in the pipework close to the boiler and in the low points of the system.

NOTE
Although the system can be emptied using the drain off taps installed in the pipework around the system, to empty the boiler it is necessary to remove the drain off cap positioned within the boiler case. See FIG. 2.

SEALED SYSTEMS
Installation
The installation must comply with the requirements of BS 6798 1987 and BS 5449 Part 1. The B.G. publication “British Gas Specification for Domestic Wet Central Heating Systems” should also be consulted.
Safety Valve
A non-adjustable spring-loaded safety valve, preset to operate at 3 bar (451bf/in^2) shall be used. It must comply with BS 6759 Part 1 and include a manual testing device. It shall be positioned in the flow pipe either horizontally or vertically upwards and close to the boiler. No shut-off valves are to be placed between the boiler and the safety valve. The valve should be installed into a discharge pipe which permits the safe discharge of steam and hot water such that no hazard to persons or damage to electrical components is caused.

Pressure Gauge
A pressure gauge incorporating a fill pressure indicator, covering the range 0-4 bar (60Ibf/in^5) shall be fitted to the system. It should be connected to the system, preferably at the same point as the expansion vessel. Its location should be visible from the filling point.

Expansion Vessel
A diaphragm type expansion vessel to BS4814 Part 1 shall be fitted close to the inlet side of the pump. The connecting pipework should not be less than 15mm (^{1},’2in nominal). Pipework connecting the expansion vessel should not incoporate valves of any sort. Methods of supporting the vessel are supplied by the manufacturer. The nitrogen or air charge pressure of the expansion vessel shall not be less than the hydrostatic head (height of the top point of the system above the expansion vessel). To size the expansion vessel it is first necessary to calculate the volume of water in the system in litres. The following volumes may be used as a conservative guide to calculating the system volume.

Boiler Heat Exchanger:	6.5 litres
Small Bore Pipework:	1 litre per kW of system output
Micro Bore Pipework:	7 litres
Steel Panel Radiators:	8 litres per kW of system output
Low Water Capacity Radiators:	2 litres per kW of system output
Hot water Cylinder:	2 litres

If the system is extended, the expansion vessel volume may have to be increased unless previous provision has been made for the extension. Where a vessel of the calculated size is not available, the next available larger size should be used. The boiler flow temperature is controlled at approximately 82^0C.

The vessel size can now be determined from the following table where V=System volume in litres.

Vessel Charge Pressure(bar)	0.5	1.0
Initial System Pressure (bar)	1.0	1.0
Expansion Vessel Volume (litres)	V x 0.11	V x 0.087

Cylinder
The hot water cylinder must be an indirect coil type or a direct cylinder fitted with an immersion calorifier suitable for operating at a gauge pressure of 0.3 bar (Slbf/in^2) in excess of safety valve setting. Single feed indirect cylinders are not suitable for sealed systems.

Method of Make-Up
Provision shall be made for replacing water loss from the system either :-

i) from a make-up vessel or tank mounted in a position higher than the top point of the system, and connected through a non-return valve to the system on the return side of hot water cylinder or the return side of all heat emitters.
or
ii) where access to a make-up vessel would be difficult by using the mains top up method or a remote automatic pressurisation and make-up unit as illustrated in FIG. 7 METHODS 1 and 2.

Mains Connection
There shall be no connection to the mains water supply or to the water storage tank which supplies domestic water even through a non-return valve, without the approval of the local Water Authority.

Filling Point
The system shall be fitted with a filling point at low level which incorporates a stop valve to BS1 010 and a double check valve (approved by the National Water Council) to be fitted in this order from the system mains, Refer to FIG. 7. Method 1.

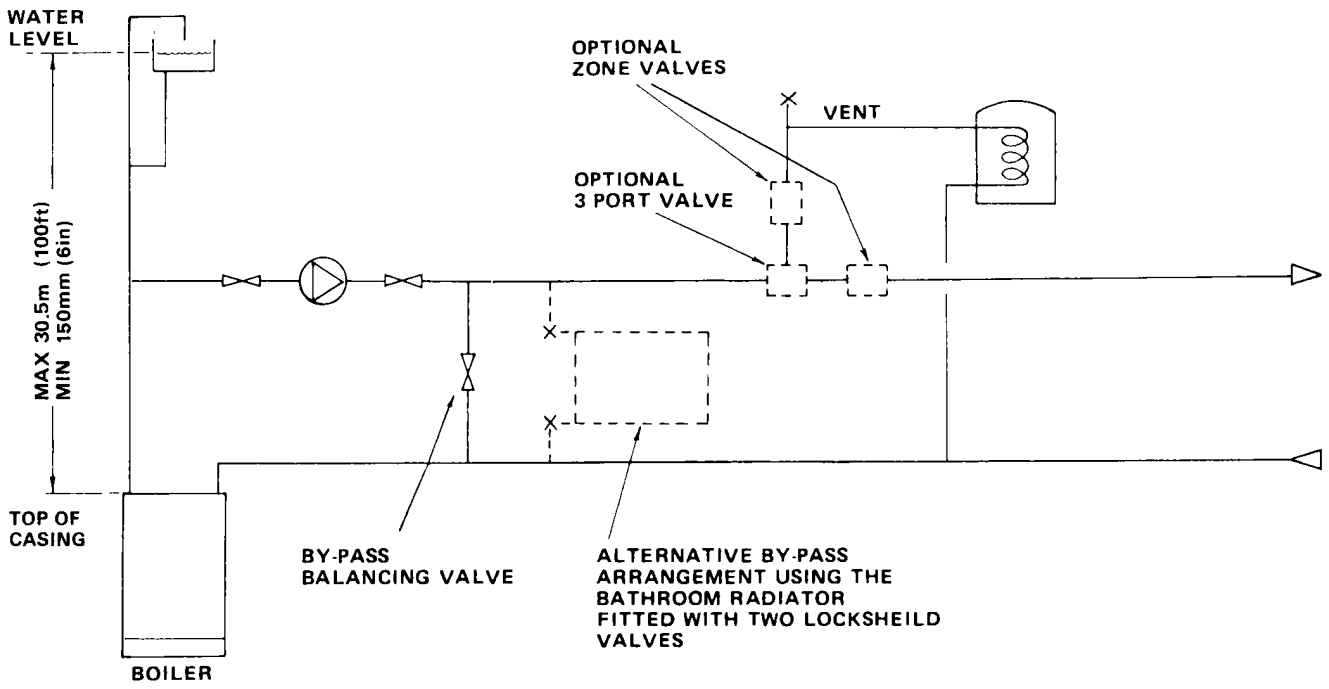

FIG. 6 OPEN VENTED FULLY PUMPED SYSTEM FITTED WITH A COMBINED FEED AND VENT

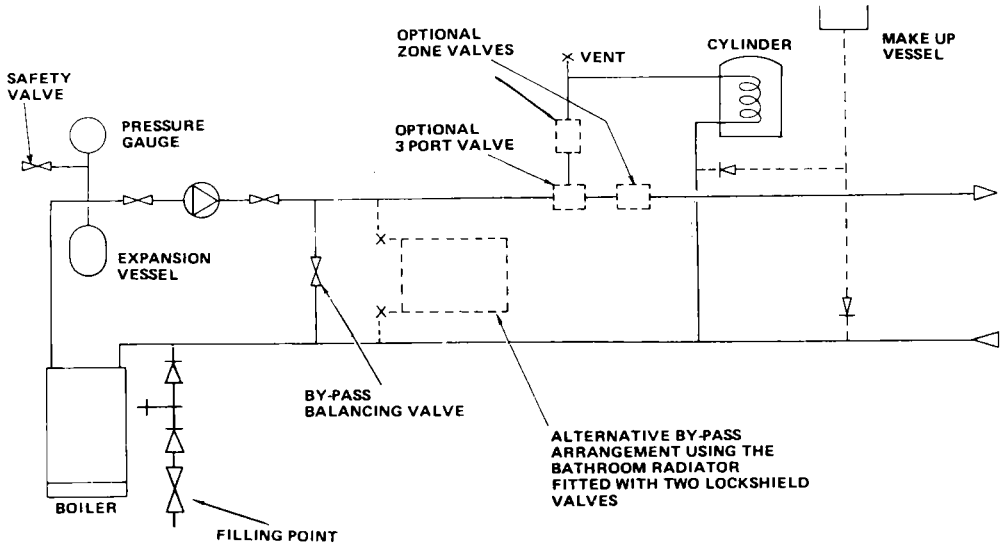

Two methods of filling a sealed water system

METHOD 1
MAINS TOPPING-UP METHOD

NOTE: This method of filling a sealed system may only be used if acceptable to the Local Water Undertaking

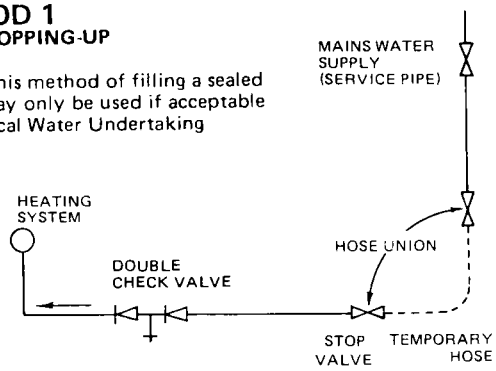

METHOD 2
CISTERN FILLING METHOD

NOTE: Cistern to be supplied through a temporary connection from a service pipe or cold water distributing pipe

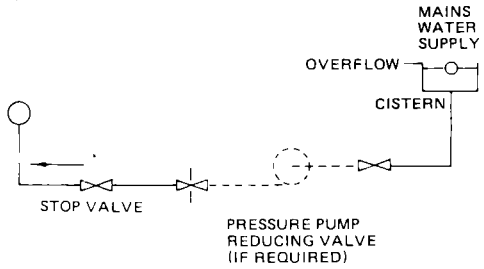

FIG 7 FULLY PUMPED SYSTEM

It is the law that all gas appliances are installed and serviced by competent persons as stated in Gas Safety (Installation and Use) Regulations 1984.
For Health and Safety Information see back page.

The boiler and its associated equipment will arrive on site in two cardboard cartons. The contents of each carton is as follows.
CARTON 1:- Boiler Pack

Boiler
Template
Literature Pack Containing:- Installation and Servicing Instructions
User's Instructions
Control Systems Pipework and Wiring Guide Auxiliary Pack Containing:-
Boiler Mounting Bracket
Gas Service Cock and Accessory Packs

CARTON 2:—Flue System Pack

Horizontal Flue Packs
Air/Flue Duct Assembly (length as ordered)
Flue Elbow Extension
Flue Terminal
Flue Sealing Collar
Rope Sealing Ring
Side Infill Panels—2 off

Vertical Flue Pack (2 cartons)
Air/Flue Duct Assembly
Flue Terminal
Terminal Cowl
Vertical Flue Adapter
Accessory Pack
Side Infill Panels—2 off
Flue Installation Instructions

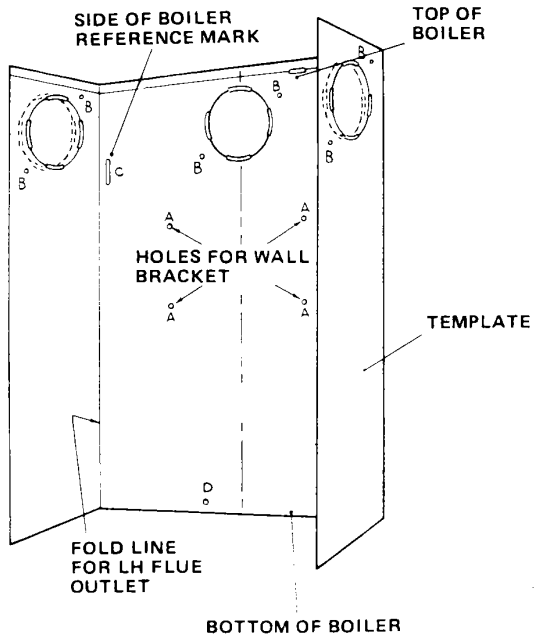

FIG. 8 TEMPLATE

Place template in proposed boiler position ensuring it is level (the minimum side clearances are automatically allowed for)

REAR FLUING

Mark holes 'A', 'B', 0', large flue outlet hole and side of boiler reference lines throught slots C'.

SIDE FLUING

Mark hole positions 'A', 'D' and side of boiler reference lines through slots 'C'.

Mark large flue outlet hole and holes B' using the thick lines on the template for minimum clearance at the rear of the boiler and the thin dotted lines for maximum clearance.
See NOTE on FIG. 1.

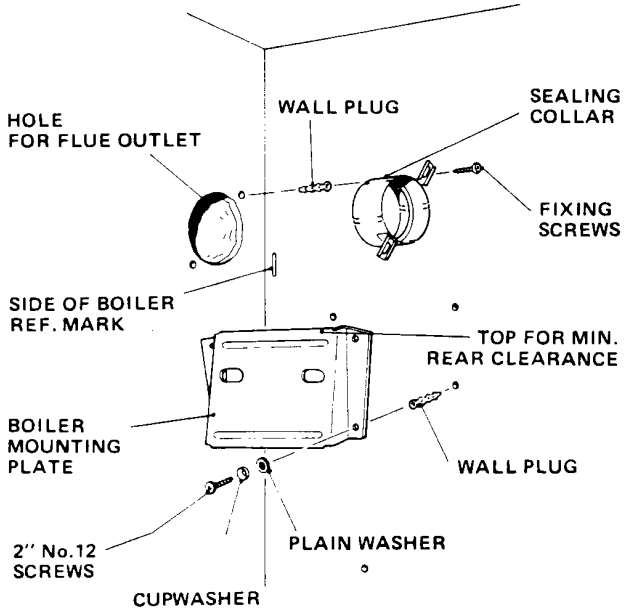

FIG. 9 BOILER MOUNTING PLATE

Remove template and carefully cut flue outlet hole through wall. If necessary make good around hole to enable holes 'B' to be drilled. (If internal flue fitment kit is being used refer to instructions supplied with kit).
Drill holes 'A' using a 7 mm drill
Drill holes 'B' and 'D' using a 5 mm drill

Using wall plugs, screws and washers (accessory pack A) attach boiler mounting plate to wall. Ensure that it is level and the correct way up, i.e. to provide the clearance at the rear of the boiler allowed for when marking out using the template. See also NOTE on FIG. 1.

Insert wall plugs into holes 'B' (accessory pack B) and hole 0' (accessory pack D).

Insert flue sealing Collar into wall and secure with screws provided, (accessory pack B). Make good the internal wall surface around flue sealing collar.

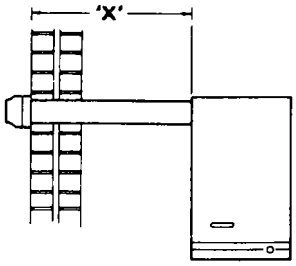

FIG. 10a SIDE FLUE

1. Measure from outside face of wall to the side of boiler casing reference line (dimension 'x').
2. Take air/flue duct assembly and measuring from the flanged end, mark and cut the outer duct and inner flue duct to dimension 'x' plus 20mm. Ensure that both ducts are cut squarely.

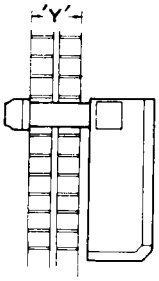

FIG. l0b REAR FLUE

1. Measure wall thickness (dimension 'Y').
2. Take air/flue duct assembly and measuring from the flanged end, mark and cut the outer air duct and inner flue duct to dimension 'Y', plus 45 mm. Ensure that both ducts are cut squarely.

NOTE

Cutting length remains the same for minimum or maximum clearance at the rear of the boiler.

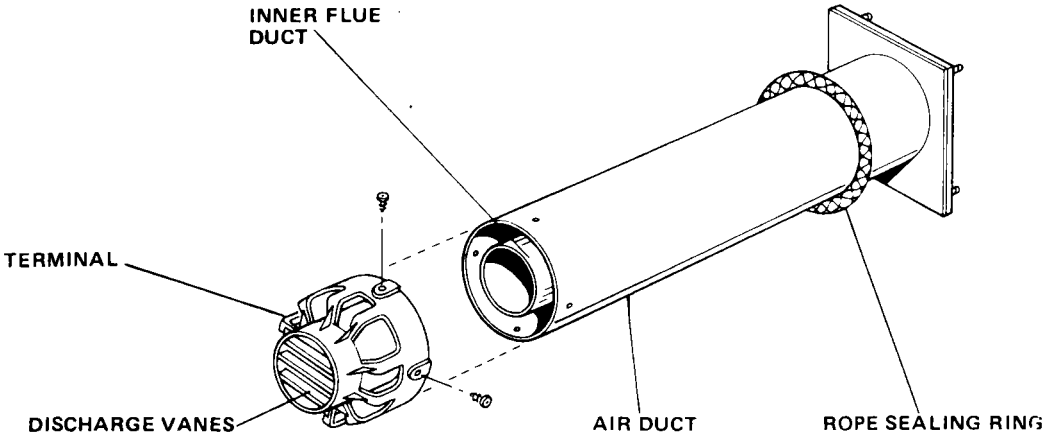

FIG. 11 AIR/FLUE DUCT ASSEMBLY

1. Slide rope sealing ring on to air duct.
2. Engage the terminal on to the ends of the inner flue duct and outer air duct with its discharge vanes arranged to deflect the flue products in the desired direction. Press terminal fully home.
3. Engage four screws from accessory pack 'C' into the pre-drilled holes in the terminal and screw fully home. These screws which are self drilling will pierce the air duct and secure the terminal to air duct.

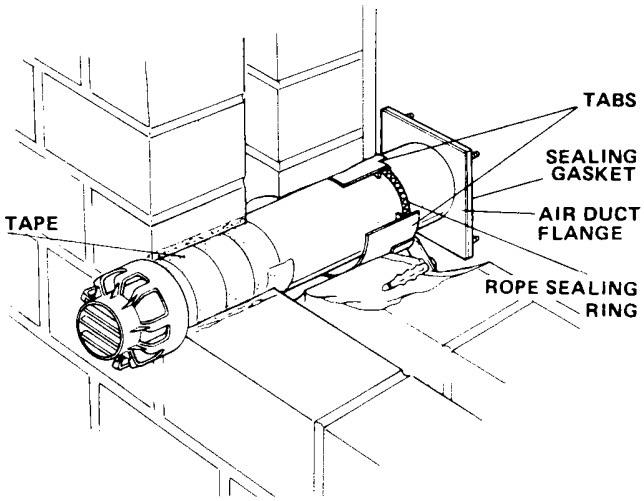

FIG. 12 SECTIONAL VIEW OF AIR/FLUE DUCT ASSY THROUGH WALL

4. Protect duct where it is likely to come into contact with mortar by using adhesive tape provided (accessory pack E).
5. Insert the assembly into the wall sliding the rope sealing ring along the air duct into the flue sealing collar. Bend the six tabs on flue sealing collar inwards to retain the rope sealing ring. Ensure air duct flange studs do not obstruct lifting of boiler onto mounting bracket.

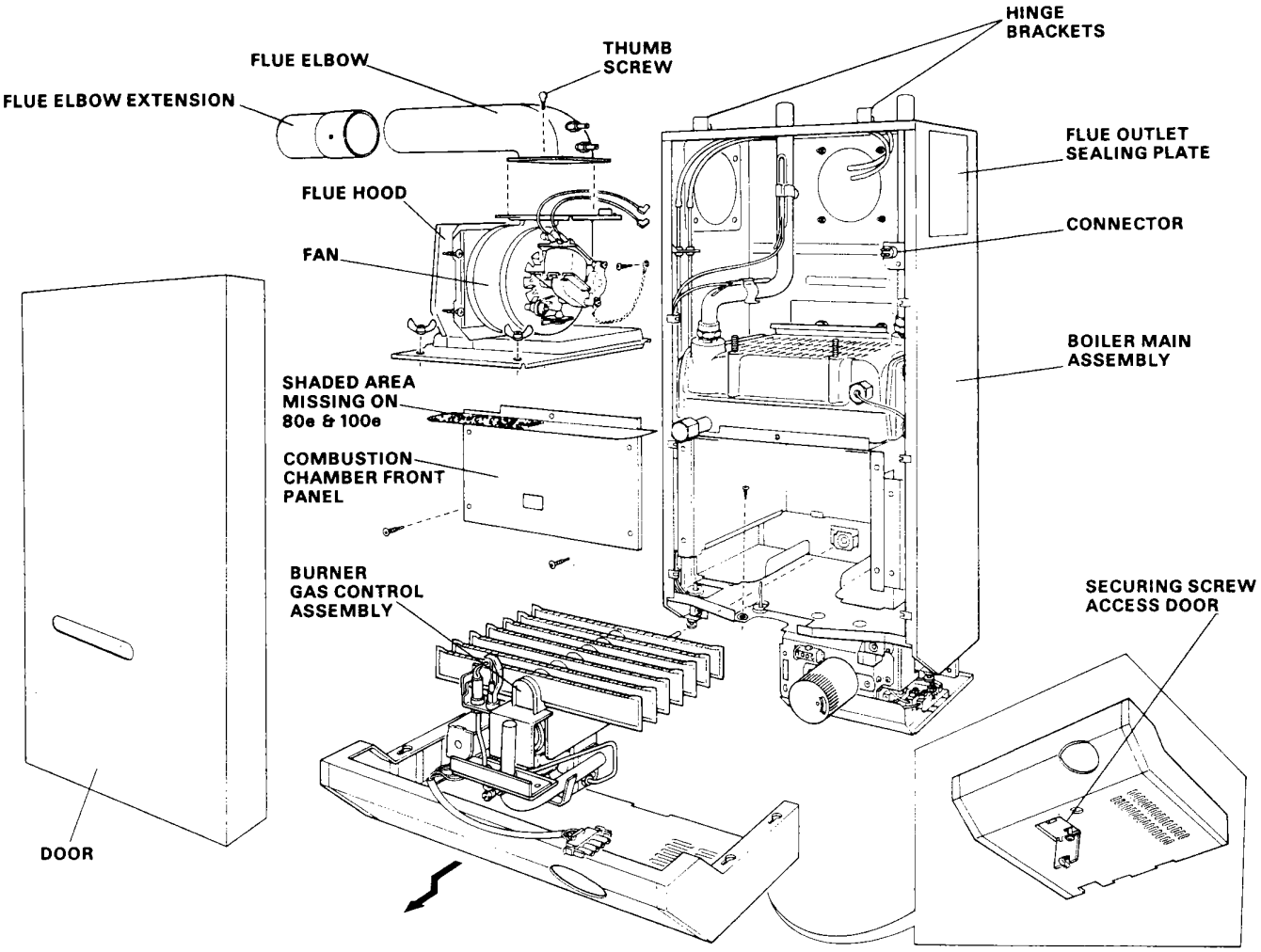

FIG. 13 PREPARING THE BOILER

The controls cover should have been removed when unpacking the boiler, if not remove controls cover by opening the door covering the securing screw on the underside of controls cover, see FiG 13.

Undo securing screw, pull controls coverforward 10mm, lower to release from four side fixings and pull forward clear of thermostat knob.

Remove the door by undoing the lowerfixing screws and lift door off the two upper hinge brackets.

Disconnect the two flexible tubes from the flue elbow. Remove thumb screw securing the flue elbow and remove elbow by sliding forward to disengage it from its rear retaining flange.

NOTE

The boiler is supplied with the left hand flue outlet sealing plate removed. If another flue outlet direction is required, remove the appropriate flue outlet sealing plate and transfer it to the left hand position.

The boiler may now be lifted onto its mounting bracket or if desired the appliance lift weight can be furtherreduced by removing the fan/fluehood assembly also the burner/ gas control assembly as follows.

1. Removing fan/fluehood assembly.

   Disconnect the fan supply and earth leads from the connector adjacent to the fan. Remove the two wing nuts securing the flue hood tothe heat exchanger. Lift out fan/fluehood assembly.

2. Removing burner/gas control assembly.
   Remove the screws securing the combustion chamber front panel and remove panel. Unplug the electrical supply leads for the gas control valve from the control box.
   Remove the screw securing the gas control valve to its support bracket.

   Disconnect electrode lead from electrode.

   Remove two screws securing the burner assembly to the bottom of the boiler case and lift out the burner/gas control assembly.

LIFTING THE BOILER
Lift the boiler onto its mounting bracket

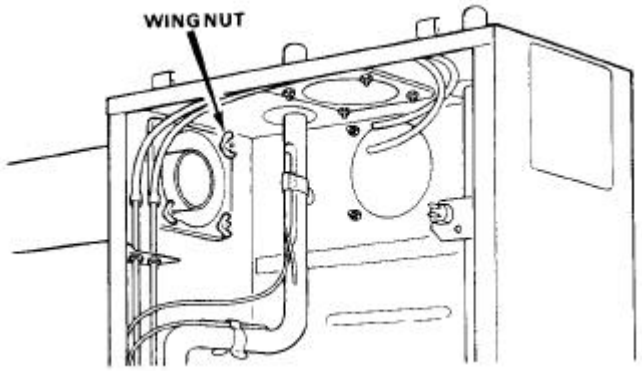

FIG !4

Locate the studs on the air duct flange through the boiler casing and secure using four wing nuts (accessory pack F).

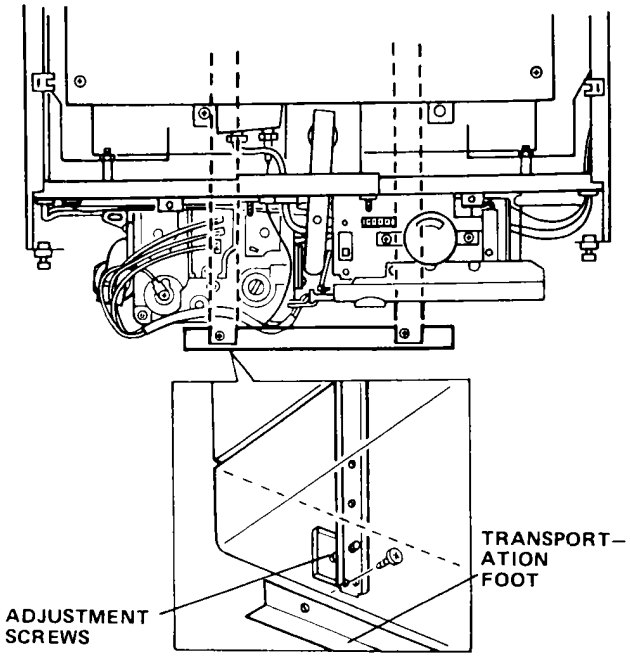

FIG 15
Position boiler on its mounting bracket so that the sides of the boiler line up with the reference lines ‘C’ on the rear wall
Undo the two screws securing the transportation foot and discard foot. Vertical alignment with rear wall can be corrected using the adjustment screws at the rear of the boiler. See FIGS. 15 & 16.

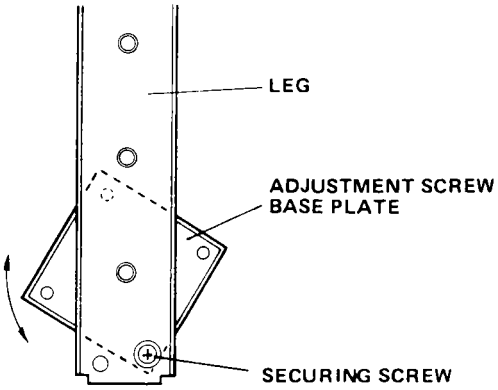

FIG. 16 SECURING BOILER

Rotate the left hand adjustment screw to align one of the holes in the base plate with hole ‘D’ in the wall. Working through the hole in the leg, secure the base plate to the wall using the screw from accessory pack D. Make good the wall surface around the flue terminal. Fit optional terminal wall plate if required.

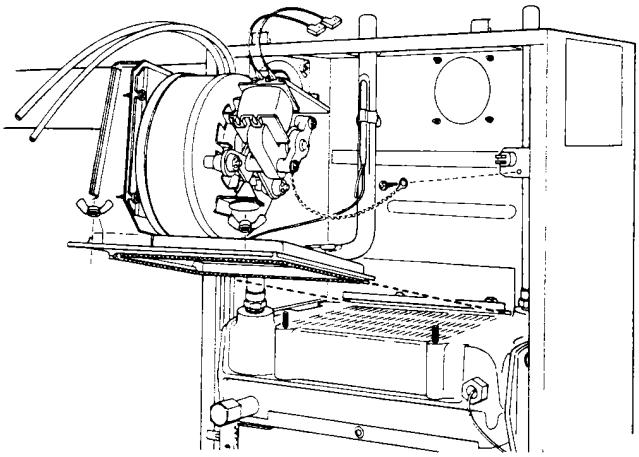

FIG. 17

If the fan/ fluehood assembly or burner/gas control assembly were removed to reduce the appliance lift weight, refit them to the boiler. Reassembly is the reverse of removal. When refitting the burner/gas control assembly ensure that the locating pin on the rear of the burner engages correctly into the rear support bracket.

When refitting the fan/ fluehood assembly ensure that the rear of the fluehood is correctly located beneath retaining flange. See FIG. 17.

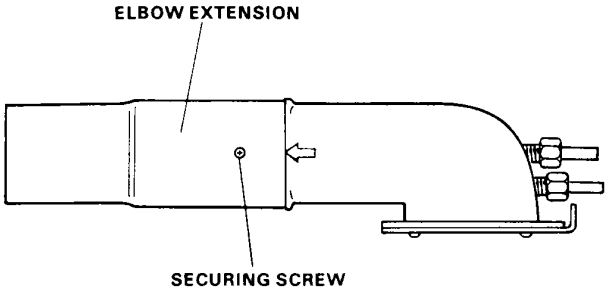

FIG. 18 FLUE ELBOW EXTENSION

When side fluing, slide the elbow extension onto the elbow, push on fully and align the hole for securing screw with arrow on elbow. Engage the screw from accessory pack 'C' into the pre-drilled hole in elbow extension and screw fully home. The screw which is self drilling will pierce the elbow and secure the extension to the elbow.

When rear fluing, the elbow extension should be discarded.

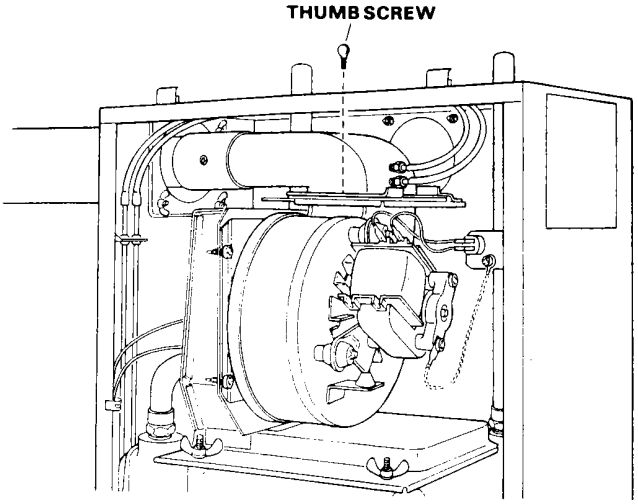

FIG 19 LOCATION OF PRESSURE SENSING TUBES

Slide the flue elbow into the duct, ensure that the sealing gasket is in place and the elbow is correctly located beneath the retaining flange at the rear See FIG 19

Secure elbow using thumb screw previously removed.

Reconnect flexible tubes to elbow.

ENSURE THEY ARE NOT KINKED.
The tubes are supplied at the length required for left hand flue outlet. When using rear or right hand flue outlets, to avoid kinking, the tubes should be shortened by 150mm. A band around the tube indicates the cutting point.
NOTE
Red tube connects the front aluminium tube to the lower connection on the elbow, each being identified with a red ring.

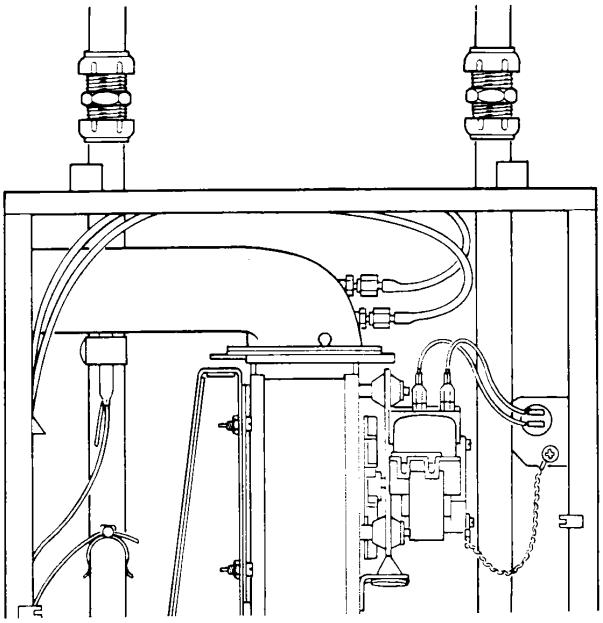

FIG. 20 PIPE CONNECTIONS

Connect system pipework to the boiler, compression fittings should be used. If however capillary fittings are used it is essential to temporarily remove both of the thermostat bulbs from the flow pipe before soldering.

A drain off tap should be installed close to the boiler if it is in a low point of the system. Connect the gas supply pipe to the inlet of the gas cock. Ensure the gas cock is in a position where it can be easily operated when the controls cover is removed.

ELECTRICAL

The boiler and all external control circuit wiring must be supplied from the same single isolating switch or plug and socket, and should be fused at 3A.

Care must be taken to ensure that all wiring to the boiler is kept clear of sharp edges and hot surfaces.

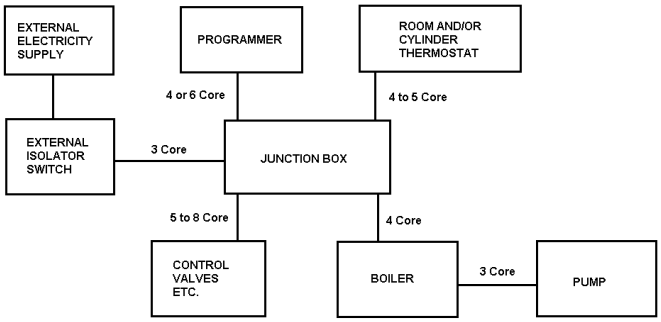

FIG. 21 PRINCIPLE OF WIRING

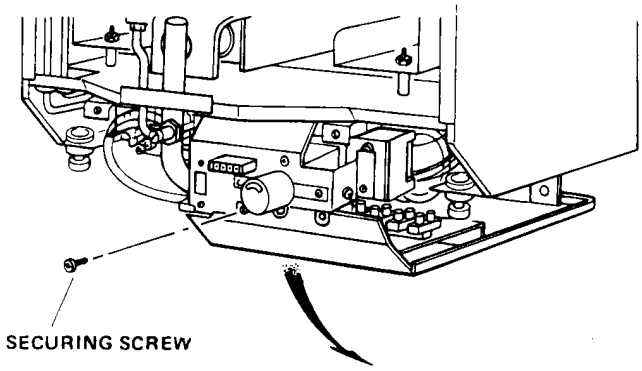

FIG. 22 ACCESS TO THE BOILER ELECTRICAL

The boiler terminal block which is situated in the control box is not designed to accept wiring from all the on site controls and therefore the installer will usually need to incorporate a suitable junction box. This may not be required if a Potterton Electronic Programmer is used as this incorporates a junction box. The principle of wiring is shown in FIG. 21.

Further information on wiring of system controls can be found in the Control System, Pipework and Wiring Guide.

Remove control box securing screw and lower the control box to gain access to the boiler terminal block.

Remove packaging from rear of the control box.

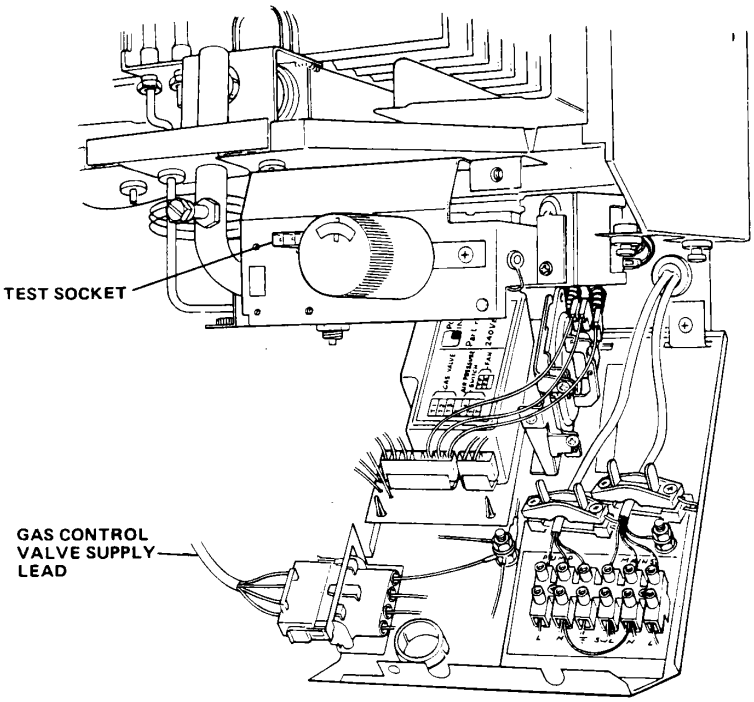

FIG. 23 ROUTING OF ELECTRICAL WIRING

Following the pump manufacturer's instructions connect the pump supply wires to terminals marked PUMP LN ⏚ on the boiler terminal block. Route the cable through the plastic bush in the rear of the control box as illustrated in FIG. 23 and secure, using the cable clamp.

Route a four core cable through the plastic bush in the rear of the control box and the cable clamp as illustrated in FIG. 23 and connect it to the boiler input terminals as follows:-

Permanent live to terminal marked MAINS 'L'.
Neutral to terminal marked MAINS 'N'.
Earth to terminal marked ⏚ adjacent to cable clamp.
See NOTE.
Switched live from external controls to terminal marked MAINS 'SwL'.
If there are no external controls fitted connect the SwL terminal to permanent live in the junction box.

NOTE:
Ensure that the earth conductor is longer than the L, N & SwL from the point of anchorage, so that the current carrying conductors become taut before the earth conductor if cable is pulled out of the cable clamp. When the wiring has been completed close the control box and replace the securing screw.

FITTING SIDE INFILL PANELS

If required, the gap between the casing sides and rear wall can be closed off using the infill panels supplied. Minimum or maximum rear boiler clearance is catered for by turning the infill panel. Attach each infill panel to the rear of the boiler using two pieces of magnetic strip (accessory pack G) positioned as illustrated.

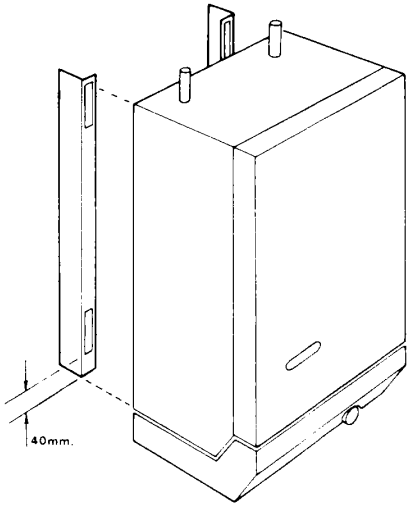

FIG 24

Open Vented System

Remove the pump and flush out the system thoroughly with cold water. Refit the pump. Fill and vent the system. Examine for leaks.

Sealed Systems

NOTE:

The system can be filled using a sealed system filler pump with a break tank or by any other method approved by the Local Water Authority. Refer to 'THE SYSTEM' section Page 8 in these instructions, also BS6798 1987.

Remove pump and flush out the system thoroughly with cold water. Refit the pump. Fill and vent the system until the pressure gauge registers 1.5 bar (21.5 lbf/in^2). Examine for leaks. Raise the pressure until the safety valve lifts. This should occur within $\pm$ 0.3 bar of the preset lift pressure of 3 bar. Release water to attain the correct cold fill pressure, and set the indicator on the water gauge to this value.

All Systems

The whole of the gas installation including the meter should be inspected and tested for soundness and purged in accordance with the recommendations of BS 6891.

Test pilot unions for gas soundness as follows:- Turn boiler thermostat to the 'O' position.

Unplug the gas control valve supply lead from the control box and plug it into the test socket adjacent to the boiler thermostat knob, See FIG. 23.
Turn on gas at the gas service cock.

Ensure that the time control if fitted is in an ON condition, and that the room and/or cylinder thermostats where fitted are set to high temperatures.

Switch on the external electricity supply to the boiler.

Gas will flow to the pilot only. It will not be ignited as the ignition system is de-energised.
Using a leak detection fluid, check pilot unions for gas soundness.

Turn off the external electricity supply and gas service cock.

Remove gas control valve plug from the test socket and refit the plug into the socket on the left hand side of the control box. See FIG. 23.

Refit the combustion chamber front panel.

Fit the case door into position by lifting it onto the top hinge brackets and secure it with the lower two fixing screws.

First Lighting

WARNING: Before lighting the boiler,ensure that the CASE DOOR HAS BEEN CORRECTLY FITTED and that the sealing strip fitted to the case door is forming a tight seal with the main boiler casing. Before proceeding to light the boiler, check that the external electricity supply to the boiler is switched off and that the boiler thermostat is in the 'O' position.

Turn on the gas service cock.

Ensure that the pump and radiator isolating valves are open.

Ensure that the time control, if fitted is in an on condition, and that the room and/or cylinder thermostats, where fitted are set to high temperatures.

Switch on the external electricity supply to the boiler.

After installation of the appliance, preliminary electrical system checks must be carried out. The checks to be carried out are:-

A. Earth Continuity

B. Short Circuit

C. Polarity

D. Resistance to Earth

Refer to Fault Finding Chart FIG. 30

Turn the boiler thermostat on and to a high setting and after a period of time the main burner will light, this can be observed through the sight glass in the front cover of the boiler. The time period can vary upwards of 45 seconds, depending on the amount of air in the pipework.

Test for gas soundness around the boiler components * using leak detection fluid.
Turn the boiler thermostat to 'O'.

NOTE:

There could be a delay in lighting if the control knob is switched on and off and then on again rapidly.

SETTING AND CHECKING OF CONTROLS

With the controls cover removed.

Fit a pressure gauge to the pressure test nipple in burner supply pipe. See FIG. 2.

Turn on the boiler thermostat and ensure that the main burner is alight. Check that the burner pressure is in accordance with values stated under TECHNICAL DATA.

The burner pressure is set to the maximum Output at the factory.

If burner pressure adjustment is necessary proceed as follows, referring to FIG. 25.

WHITE RODGERS GAS CONTROL VALVE
Remove the brass cover screw from the gas control valve and turn the screw beneath, clockwise to increase the pressure or anti-clockwise to decrease the pressure.

HONEYWELL GAS CONTROL VALVE
Turn the pressure adjustment screw anti-clockwise to increase the pressure or clockwise to decrease the pressure.

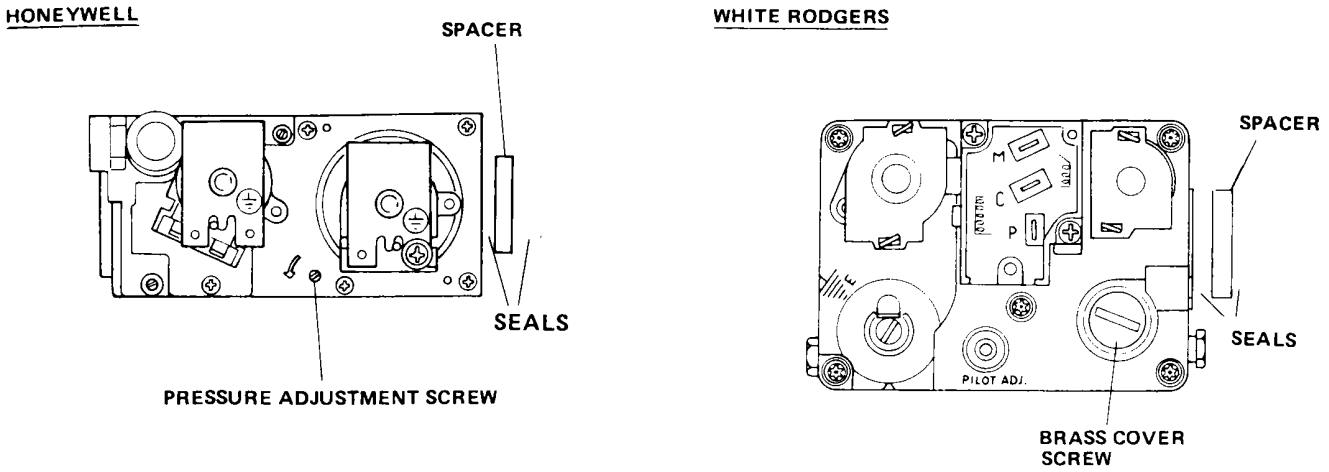

FIG. 25 MAIN BURNER PRESSURE ADJUSTMENT

With the burner set to its correct pressure, the firing rate given in TECHNICAL DATA should also be obtained and this should be checked by meter reading at least 10 minutes after the main burner has been lit. When the pressure and rate are correct replace the brass cover screw on WHITE RODGERS gas control valve.

Shut down the boiler remove the pressure gauge and refit the screw in the test nipple ensuring that a tight seal is made.

Remove the self-adhesive arrow from the inspection ticket tied to the burner supply pipe and stick it to the Data Plate inside the controls cover to indicate the appropriate burner setting pressure.

Refit the controls cover.

Relight the boiler and heat the system to maximum. Check for water leaks, turn the boiler off, drain the system whilst hot.

Refill the system and on sealed systems adjust to the correct cold fill pressure. Set the pressure gauge pointer to the system design pressure.

If a by-pass circuit is fitted the by-pass valve should be adjusted with the boiler operating under minimum load conditions to maintain sufficient water flow through the boiler to ensure that the overheat thermostat does not operate under normal operating conditions.

Pilot Burner

The pilot is pre-set and no adjustment is required. The pilot flame envelope should cover the electrode tip and spark earthing strip see FIG. 29. If the pilot flame is not as illustrated, remove and clean the pilot as described in the Servicing Instructions Section 4, PILOT BURNER, Page 22.

Boiler Thermostat

At its minimum and maximum settings, the thermostat should control the water flow temperature at approximately 55^0C—82^0C (130^0F—180^0 F).

The thermostat has been calibrated by the makers and no attempt should be made to re-calibrate it on site. Turn the thermostat to the ‘O’ position and check that the main burner shuts down.

Pump Over-Run Thermostat

Will keep the pump running after the boiler has shut down, as long as the water temperature within the boiler is above 80^0C.

The thermostat is preset and no adjustment is possible.

Overheat Thermostat

The overheat thermostat is pre-set and no adjustment is possible. It will require manually resetting if an overheat condition occurs. Access to the reset button is through a hole in the underside of the controls cover, see FIG 2

Other Boiler Controls

All boiler mounted controls are designed so that if any fault should occur they will fail safe. No further setting or checking is necessary.

External Controls

Check that any other external control connected in the system, such as clocks and thermostats, control the boiler as required.

User’s Instructions

A User’s Instructions leaflet is provided with this boiler but the householder must have the operation of the boiler and system explained by the Installer. The householder must also be advised of the importance of annual servicing and of the precautions necessary to prevent damage to the system and building, in the event of the system remaining out of commission in frost conditions.

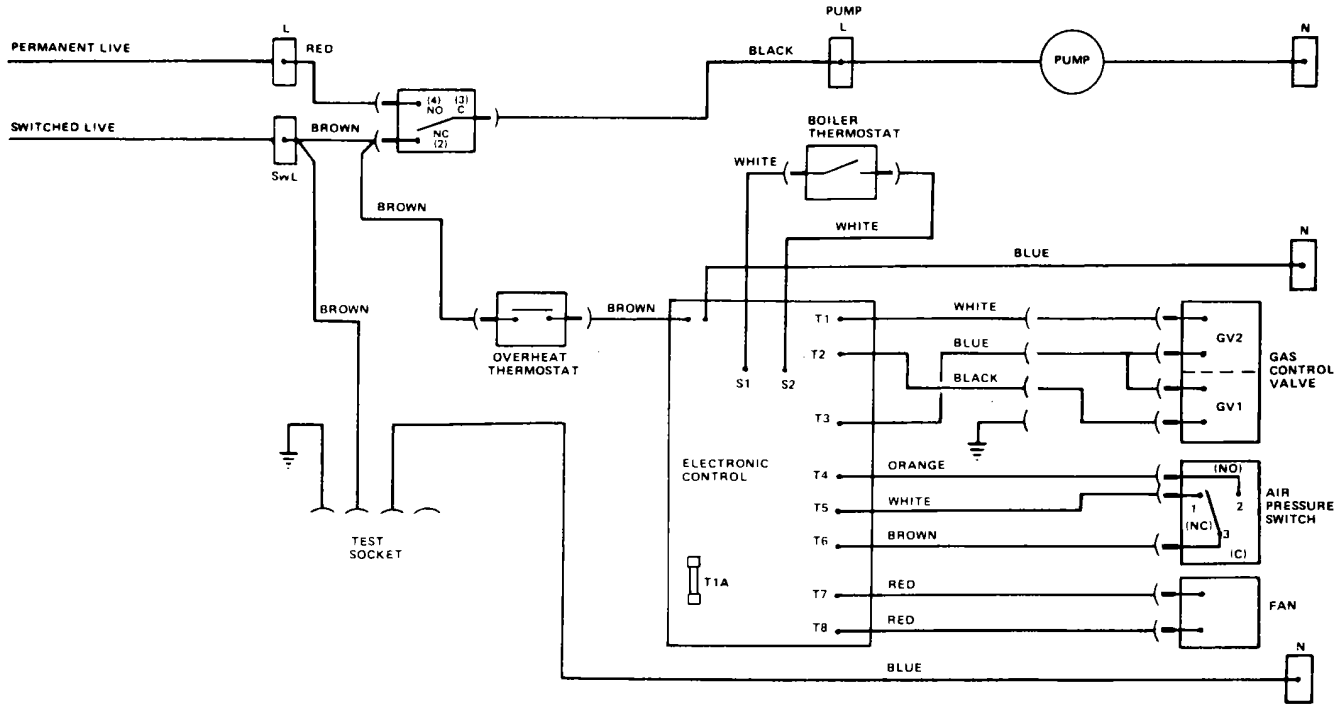

FIG 26 FUNCTIONAL FLOW DIAGRAM

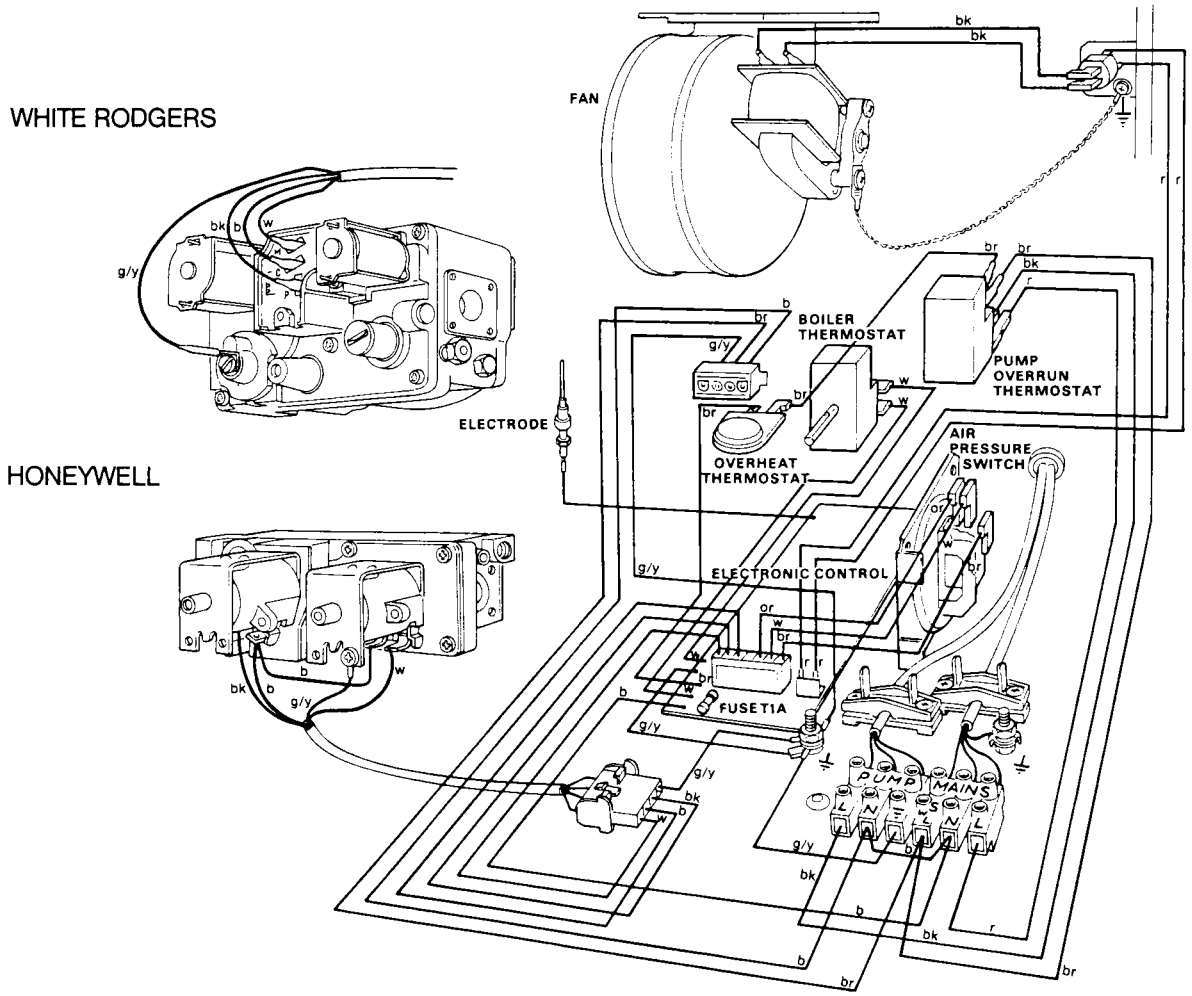

FIG 27 BOILER WIRING DIAGRAM

Regular skilled servicing and cleaning of the appliance is essential to ensure continued safe and efficient operation. The frequency of cleaning will depend upon the particular installation conditions, and the use to which the appliance is put, but in general, once per year should be adequate.

It is the law that all gas appliances are installed and serviced by competent persons as stated in Gas Safety (Installation and Use) Regulations 1984.
For Health and Safety Information see back page.

Servicing is best arranged by a contract placed with Potterton Myson Limited and further details are available from the local Potterton Regional Service Office.

The boiler DATA PLATE and WIRING DIAGRAM are attached to the inside of the controls cover. The boiler CODE NUMBER which should be quoted when ordering spares or requesting information is on the front of the control box. See FIG. 2.

All parts likely to require servicing are readily accessible. By removing the cover from the boiler controls and removing the front door from the boiler, most components are exposed. Remove the front of the combustion chamber to gain access to the main and pilot burner and the ignition electrode.

Removal of the flue elbow, fan and fluehood will expose the flueways in the heat exchanger for cleaning.

The following notes apply to the boiler and its controls but it should be remembered that attention must also be paid to the heating circuit itself including radiator valves, thermostats, the time control and the expansion and feed water system. It is advisable to clean the boiler immediately after the end of the heating season.

In all cases prior to servicing, light up the boiler and check that the pilot and main bumers have a clean, even flame and that the gas rate and main burner pressure are correctly set. If the pilot flame is satisfactory, no further servicing of the pilot burner is necessary and the information given in '3. PILOT BURNER' can be ignored.

WARNING
Before the start of any servicing work, switch off at the external electricity supply by disconnecting the supply plug at the socket or switching off the external isolating switch. Turn off the gas service cock.

NOTE: After completing any servicing or replacement of components check for gas soundness and carry out functional checks.

1. **PREPARING THE BOILER FOR SERVICING**
   See FIG. 13.
   NOTE: Boilers with side or rear flues have a flue elbow fitted to the fluehood.

   The elbow is replaced by an adapter on vertically flued boilers.

A. Remove controls cover by opening the door covering the securing screw on the underside of the controls cover, see FIG. 13. Undo securing screw, pull controls cover forward 10mm, lower it to release it from its four side fixings and pull forward clear of the thermostat knob.

B. Remove door by undoing the lower fixing screws and lift door off the two upper hinge brackets.

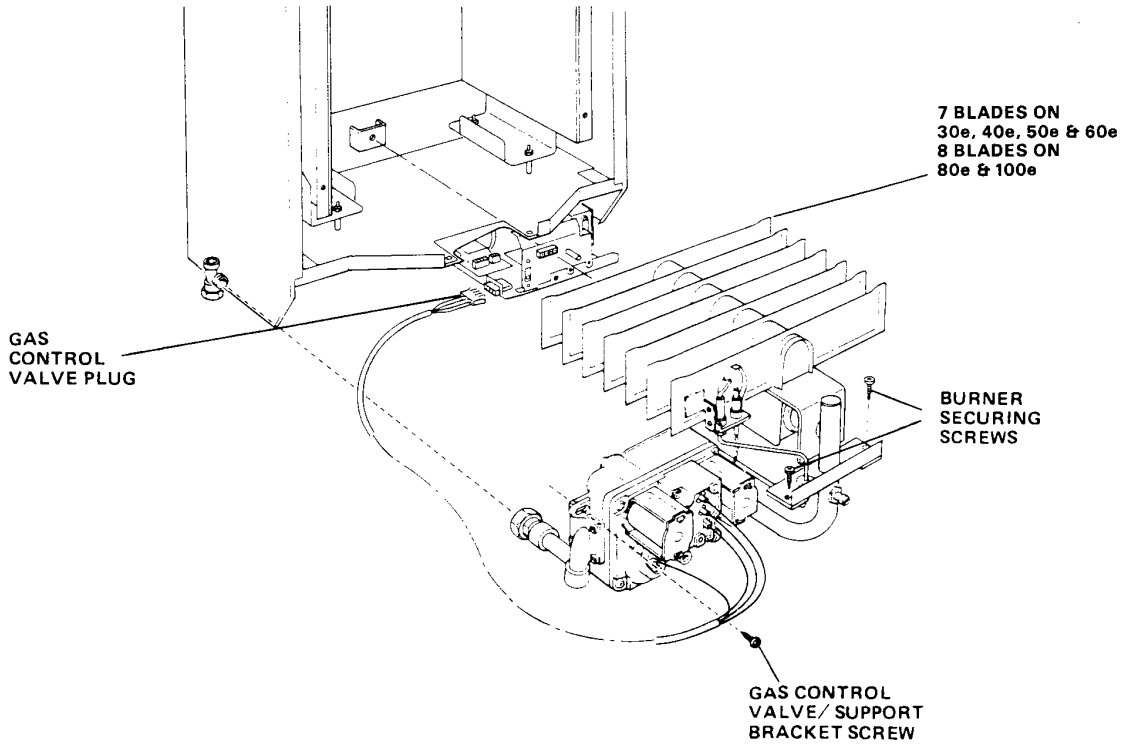

FIG. 28 BURNER AND GAS CONTROL ASSEMBLY

C Remove screws securing the combustion chamber front panel and remove panel.
D Disconnect the two flexible tubes from the flue elbow.

E. Remove thumb screw securing the flue elbow and withdraw elbow. Take care not to damage the gasket. On vertically flued boilers remove two thumb screws and slide the vertical flue adapter up into the flue duct.

F. Disconnect the fan supply and earth leads from the connector adjacent to the fan. Remove the two wing nuts securing the flue hood to the heat exchanger. Lift out fan/flue hood assembly.

Lower and lift out vertical adapter.

G. Undo the union on the gas service cock outlet.

H. Unplug the electrical supply leads for the gas control valve from control box. See FIG. 28.
I. Remove the screw securing the gas control valve to its support bracket. See FIG. 28.
J. Disconnect the electrode lead from electrode.

K. Remove two screws securing the burner assembly to the bottom of the boiler case and lift out the burner and gas control assembly.

2. HEAT EXCHANGER

A. Working from above and below the heat exchanger use a suitable tool and remove all deposits from between the fins.

Slide vertical flue adapter into flue duct.

3. FAN

A. Separate fan from fluehood by removing the two securing screws.

Carefully clean any deposits from around the fan motor and its supports. Examine the fan wheel and clean if necessary using a soft brush.

Re-assemble fan to fluehood ensuring that the sealing gasket is in place and in good condition. Ensure also that the fan is located correctly in the rear retaining bracket.

Secure with two screws.

B. Refit the fan/fluehood assembly. Ensure that the rope seal is in place and the rear of the fluehood is correctly located beneath the retaining flange. See FIG. 17. Secure with two wing nuts.

C. Slide flue elbow into the flue duct or lower flue adapter and secure with thumb screws. Ensure that the gasket between fan outlet and elbow or adapter is undamaged and in place.

D. Reconnect the flexible tubes to elbow or adapter.
ENSURE THEY ARE NOT LINKED.

NOTE
Red tube connects front aluminium tube to the lower connection on elbow or adapter each being identified with a red ring.

E. Reconnect the fan supply and earth leads.

4. PILOT BURNER

The following operations are only necessary if the pilot flame is distorted or the wrong size, ie too small.

A. Unscrew the pilot tube from the pilot assembly. Take care not to damage the electrode.

B. Unscrew the two hexagonal head screws securing the pilot to the main burner and remove pilot assembly and shield where fitted, be careful that the pilot injector does not fall out during this operation.

C. Lightly brush the pilot to remove any deposits. Remove the pilot injector and clean its orifice or replace.

NOTE
Do not use a wire brush or pin to clean injector.

D. Gently clean any deposits from the electrode.

E. Refit the pilot injector to the pilot burner and assemble the pilot to the pilot tube.

F. Secure the pilot assembly to the main burner using two hexagonal screws.

G. Fully tighten the union nut connecting the pilot tube to the pilot. Check for gas soundness at this joint by following the procedure described in the commissioning section of these instructions. Page 18.

H. Ensure that the spark gap is as illustrated in FIG. 29.

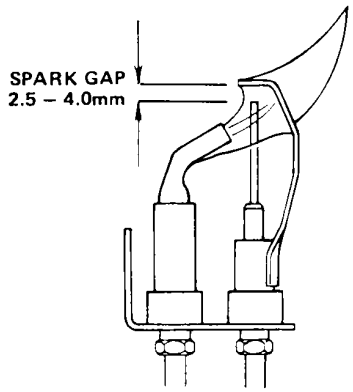

FIG. 29 PILOT BURNER SPARK GAP TOLERANCES

PILOT FILTER

The pilot burner is protected from blockage by a pilot filter situated within the gas control valve. The filter is large and designed to last the life of the gas control valve under normal operating conditions, it is therefore unlikely to need replacing. However in the event of pilot filter blockage being suspected the complete control valve should be replaced.

5. COMBUSTION CHAMBER INSULATION

A. Check the combustion chamber insulation for damage. If damaged replace as described under replacement.

6. MAIN BURNER

A. Lightly brush any deposits from the top of each blade and ensure there is no fluff in the entry of the burner venturi. If on re-assembly the burner flame picture is incorrect or the correct gas rate or burner pressure cannot be obtained, remove the burner and gas control assembly and thoroughly clean the burner. Clean or replace the injector. In the event of the above procedures not rectifying the flame appearance, disconnect the burner from the gas control valve at the flanged connection and replace the burner and injector.

B. Refit the burner and gas control valve assembly into the boiler, ensuring that the locating pin on the rear of burner engages correctly into the rear support bracket. Make sure that the sealing gasket is in place and undamaged between the burner flange and the case. Secure the assembly with two screws.
C. Refit the screw securing the gas control valve to the support bracket.

D. Reconnect electrode lead to electrode.

E. Plug gas control valve supply leads into control box.
F. Reconnect gas supply at gas service cock and turn on gas.

G. Refit the combustion chamber front panel.

7. CASE SEAL
Check the case door seal. Replace if damaged. The seal is simply pressed into the channel around the door.

8. RECOMMISSION
Follow the full commissioning procedure as detailed in the COMMISSIONING section of these instructions page 18.

9. OTHER BOILER MOUNTED UNITS
No further servicing is required on any other boiler mounted units. Repair is by replacement.

10. FAULT FINDING
Refer to Fault Finding Chart FIG. 30 and Wiring Diagram FIGS. 26, 27.

REMOVAL/REPLACEMENT OF BOILER MOUNTED UNITS

GAS CONTROL VALVE
This operation is most easily carried out by first removing the burner and gas control valve assembly as follows:

1. Switch off the external electricity supply by disconnecting the plug at the socket or switching off the external isolating switch.

2. Remove controls cover, case door and combustion chamber front panel as described in 1. 'Preparing the Boiler for Servicing', operations A, B and C.

3. Remove the burner and gas control assembly as described in 1. 'Preparing the Boiler for Servicing', operations G, H, I, J & K.

4. Disconnect the electrical supply wires from the gas control valve noting their position. Refer to FIGS. 26 & 27.

5. Unscrew the union connecting the pilot supply pipe to the gas control valve.

6. Separate the gas control valve from the flanges at the inlet and outlet ports by removing the securing screws.

   NOTE: A spacer is used between the valve outlet and the burner flange, requiring the use of two seals at this point. See FIG. 25.

7. Use new seals on re-assembly.

8. Replacement is the reverse of removal.

9. Follow the full commissioning procedure as detailed in the COMMISSIONING section of these instructions. Page 18.

MAIN BURNER
1. Switch off the external electricity supply by disconnecting the plug at the socket or switching off the external isolating switch.

2. Remove controls cover, case door and combustion chamber front panel as described in 1. 'Preparing the Boiler for Servicing', operations A, B and C.

3. Remove the burner and gas control assembly as described in 1. 'Preparing the Boiler for Servicing', operations G, H, I, J & K.

4. Unscrew the union nuts connecting the pilot supply pipe to the pilot and gas control valve. Take care not to damage the electrode and be careful that the pilot injector does not fall out during this operation.

   Remove sealing grommet and withdraw the pilot tube through the hole in the burner mounting flange.

5. Separate the burner from the gas control valve at the flanged connection by removing the four securing screws.

   NOTE
   A spacer is used between the valve outlet and the burner flange, requiring the use of two seals at this point.
   See FIG. 25.

6. Unscrew the pilot, main burner injector and pressure test nipple from the burner.

7. Use new sealing gaskets on re-assembly.

8. Replacement is the reverse of removal.

9. Follow the full commissioning procedure as detailed in the COMMISSIONING section of these instructions. Page 18.

PILOT/IGNITION ELECTRODE
1. Switch off the external electricity supply by disconnecting the plug at the socket or switching off the external isolating switch.

2. Remove controls cover, case door and combustion chamber front panel as described in 1. 'Preparing the Boiler for Servicing', operations A, B and C.

3. Disconnect the electrode lead from electrode.

4. Unscrew the aluminium pilot tube from the pilot assembly. Take care not to damage the electrode.

5. Unscrew the two hexagonal head screws securing the pilot to the main burner and remove the pilot assembly and shield where fitted, be careful that the pilot injector does not fall out during this operation.

   Unscrew electrode retaining nut and withdraw the electrode.

6. Replacement is the reverse of removal. On re-assembly ensure that the spark gap is as illustrated in FIG. 29.

7. Follow the full commissioning procedure as detailed in the COMMISSIONING section of these instructions. Page 18.

COMBUSTION CHAMBER INSULATION
1. Switch off the external electricity supply by disconnecting the plug at the socket or switching off the external isolating switch.

2. Remove controls cover, case door and combustion chamber front panel as described in 1. 'Preparing

the Boiler for Servicing', operations A, B and C.

3. Remove main burner as described in 'Preparing the Boiler for Servicing', operations G, H, I, J & K

4. Bend back retaining tabs and replace insulation. It is necessary to first remove the side insulation when replacing the rear.

5. Replacement is the reverse of removal.

6. Follow the full commissioning procedure as detailed in the COMMISSIONING section of these instructions. Page 18.

FUSE, ELECTRONIC CONTROL, PRESSURE SWITCH, BOILER THERMOSTAT, OVERHEAT THERMOSTAT, PUMP OVERRUN THERMOSTAT

The following initial operations 1-3 are necessary to remove and replace any of the above items.

1. Switch off the external electricity supply by disconnecting the plug at the socket or switching off the external isolating switch.

2. Remove controls cover by opening the door covering the securing screw on the underside of the controls cover see FIG. 13. Undo securing screw, pull controls cover forward 10mm, lower it to release it from its four side fixings and pull forward clear of the thermostat knob.

3. Remove control box securing screw and lower control box.

FUSE 1 amp

4. The fuse is located on the electronic control and can be replaced by lifting it from its holder.

5. Replacement is the reverse of removal. Refer to FIGS. 26 & 27.

ELECTRONIC CONTROL

4. Disconnect six way plug, two way plug and electrode lead from the electronic control. Refer to FIGS. 26 & 27.

   Disconnect the flying leads of the electronic control as follows:-

   white wire from terminal C(3) of the control thermostat

   white wire from terminal NC (2) of the control thermostat

   brown wire from overheat thermostat

   blue wire from boiler terminal block connector N

   green/yellow wire from earth post

5. Release the control by lifting it from the four retaining lugs.

6. Remove electronic control.

7. Replacement is the reverse of removal.

8. Follow the full commissioning procedure as detailed in the COMMISSIONING section of these instructions. Page 18.

PRESSURE SWITCH

4. Remove the screw securing the pressure switch to the bracket in the control box. Lift pressure switch from bracket.

5. Disconnect the two plastic tubes. NOTE: the red tube is connected to the pressure switch connection identified with a red ring, or adjacent red spot.

6. Disconnect the three electrical leads, white wire from terminal No. 1 or NC, orange from terminal No.2 or NO and brown from terminal No.3 or C. Refer to ~ FIGS 26 & 27.

7. Replacement is the reverse of removal. Ensure that the plastic tubes have the coiled springs positioned to prevent the tubes from kinking.

8. Follow the full commissioning procedure as detailed in the COMMISSIONING section of these instructions. Page 18.

OVERHEAT THERMOSTAT

4. Remove door by undoing the two lower fixing screws and lifting door off the two upper hinge brackets.

5. Disconnect the two push on electrical connections from the overheat thermostat terminals.

6. Remove the nut securing the overheat thermostat to its mounting bracket.

7. Noting the route taken by the capillary, remove split pin retaining the thermostat bulb and withdraw bulb from its pocket. Remove the split grommet in the base of the boiler, feed the thermostat capillary and bulb through the hole.

8. Replacement is the reverse of removal. Ensure the rubber grommet in the base of the boiler makes a good seal around the capillary. Ensure that the capillary is secure in the clips provided. Refer to FIG. 2. The bulb of the new thermostat should be coated with heat conducting paste.

9. Follow the full commissioning procedure as detailed in the COMMISSIONING section of these instructions. Page 18.

BOILER THERMOSTAT

4. Remove door by undoing the two lower fixing screws and lifting door off the two upper hinge brackets.

5. Disconnect the electrical connections as follows:-
   White from terminal 0(3). White from NC(2) Refer to FIGS. 26 & 27.

6. Pull off the outer thermostat knob.

7. Remove inner thermostat post by undoing the two securing screws.

8. Remove the nut securing the thermostat to the control box.

9. Remove the clip securing the thermostat bulb to the flow pipe.

10. Remove the split grommet in the base of the boiler. Feed the capillary and bulb through the holes.
    Replacement is the reverse of removal. The bulb of the new thermostat should be coated with heat conducting paste. Ensure the rubber grommets in the base of the boiler make a good seal around the capillary.

    Ensure that the capillary is secure in the clips provided.

    Follow the full commissioning procedure as detailed in the COMMISSIONING section of these instructions. Page 18.

PUMP OVER-RUN THERMOSTAT

4. Remove door by undoing the lower fixing screws and lifting door off the two upper hinge brackets.

5. Disconnect the electrical connections as follows:-

   1 red wire from terminal NO(4)

   2 brown wires from terminal NC(2)

   1 black wire from terminal C(3)

6. Remove the screw securing the thermostat to the control box.

7. Remove the clip securing the thermostat bulb to the flow pipe.

8. Remove the split grommet in the base of the boiler. Feed the capillary and bulb through the hole.

9. Replacement is the reverse of removal. The bulb of the new thermostat should be coated with heat conducting paste. Ensure the rubber grommet makes a good seal around the capillary.

10. Ensure that the capillary is secure in the clips ~ provided. Follow the full commissioning procedure as detailed in the COMMISSIONING section of these instructions. Page 18.

SIGHT GLASS

WARNING: GREAT CARE SHOULD BE TAKEN WHEN HANDLING AND DISPOSING OF A BROKEN SIGHT GLASS.

3. Remove door by undoing the lower fixing screws and lift door off the two upper hinge brackets.

4. Remove three M4 nuts from sight glass retainer and remove sight glass assembly. **See above.**

5. Replacement is the reverse of removal. Taking care that the clear circle in the sight glass lines up viewing hole in combustion chamber door. NOTE new gaskets must be used when sight glass is fitted.

FAN

1. Switch off the external electricity supply by disconnecting the plug at the socket or switching off the external isolating switch.

2. Remove controls cover and case door as described in 1. ‘Preparing the Boiler for Servicing’, operations A and B.

3. Disconnect the two flexible tubes from the flue elbow.

4. Remove thumb screw securing the flue elbow and withdraw elbow. Take care not to damage the gasket. On vertically flued boilers remove two thumb screws and slide the vertical flue adapter up into the flue duct.

5. Disconnect the fan supply and earth leads from the connector adjacent to the fan.

6. Separate fan from fluehood by removing the two securing screws.

7. Replacement is the reverse of removal. Ensure on re-assembly that the fan is correctly located in the rear retaining bracket.

8. Follow the full commissioning procedure as detailed in the COMMISSIONING section of these instructions. Page 18.

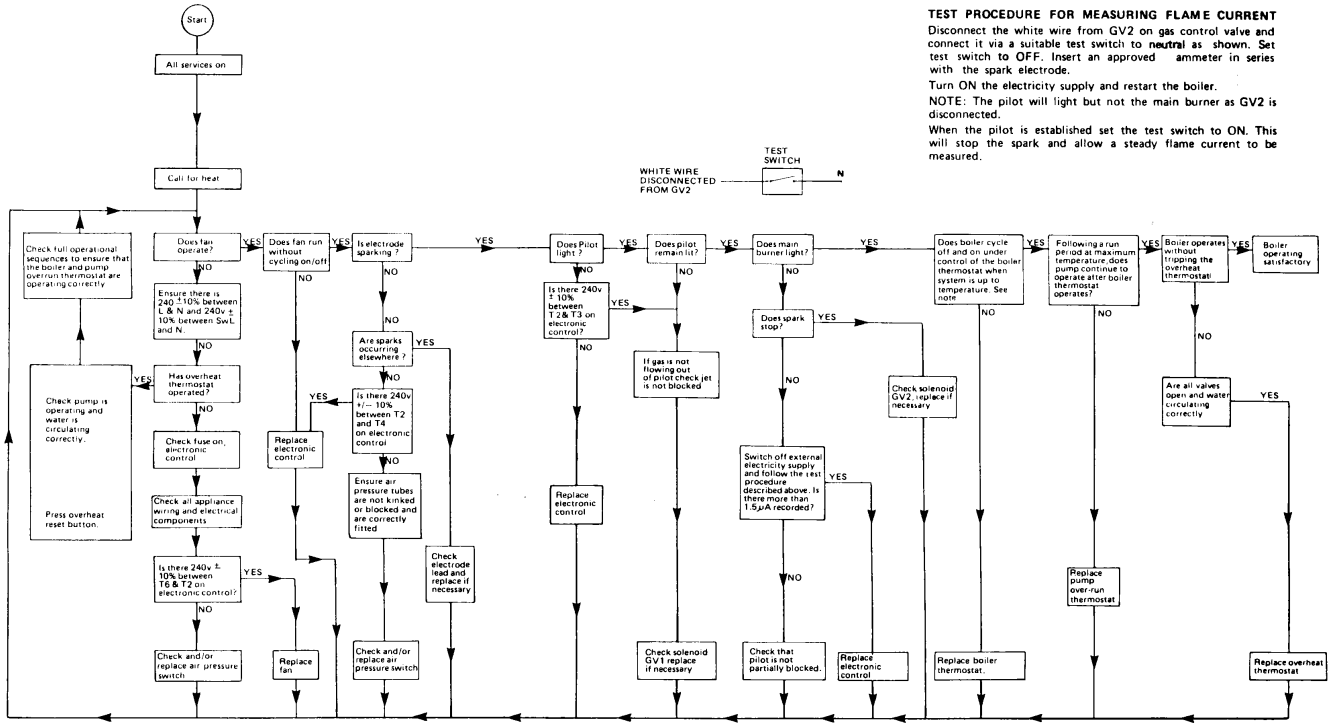

TEST PROCEDURE FOR MEASURING FLAME CURRENT

Disconnect the white wire from GV2 on gas control valve and connect it via a suitable test switch to **neutral** as shown. Set test switch to OFF. Insert an approved ammeter in series with the spark electrode.

Turn ON the electricity supply and restart the boiler.

NOTE: The pilot will light but not the main burner as GV2 is disconnected.

When the pilot is established set the test switch to ON. This will stop the spark and allow a steady flame current to be measured.

FIG 30 FAULT FINDING CHART

SHORT PARTS LIST KEY No.		P.I.L Part No.	G.C. Part No.
1	Pilot and Electrode Assembly including items 2-4	907739	337 969
2	Pilot Injector	402915	381 656
3	Shear Off Union 30e-80e Boiler	402350	357 714
	Olive 100e Boiler	402944	337 859
	Nut 100e Boiler	402955	337 858
4	Electrode	402925	382 448
5	Electrode Lead	407698	337 863
6	Control Thermostat K36 Li 014	404504	358 853
7	Gas Control Valve _Honeywell VR4700E1 034	907704	395 796
8	Gas Control Valve _White Rogers 36E 16S 502	907702	382 988
	(Items 7 & 8 include item 9)		
9	Gas Manifold Gasket	212105	337 480
10	Gas Manifold 'O' Ring	401637	337 467
11	Pump Over-Run Thermostat K36 P2302	404507	378 024
12	Flue Elbow Sealing Gasket	225091	338 316
13	Electronic Control	407677	382 462
14	Fuse (1 amp)T1A	907604	337 338
15	Thermostat Knob	213076	337 998
16	Pressure Switch _Honeywell C6065A1 192	642220	378 036
17	Fan Assembly _SEL (c.w. Gasket) 30e-60e Boiler	909000	338 318
	Fan Assembly _SEL (c.w. Gasket) 80e & 1 OOe Boiler	909001	338 319
18	Overheat Thermostat LM7 P8503	404495	382 455
19	Main Burner Gasket	212085	337 371
20	2.9mm Injector _Main Burner 30e Boiler	410965	337 374
	3.1mm Injector _Main Burner 40e Boiler	410966	337 375
	3.5mm Injector _Main Burner SQe Boiler	410967	337 376
	3.6mm Injector _Main Burner 60e Boiler	410984	338 343
	4.4mm Injector _Main Burner 80e Boiler	410969	338 378
	4.7mm Injector _Main Burner lOOe Boiler	410985	388 344
21	Flue Scraper	907736	337 862

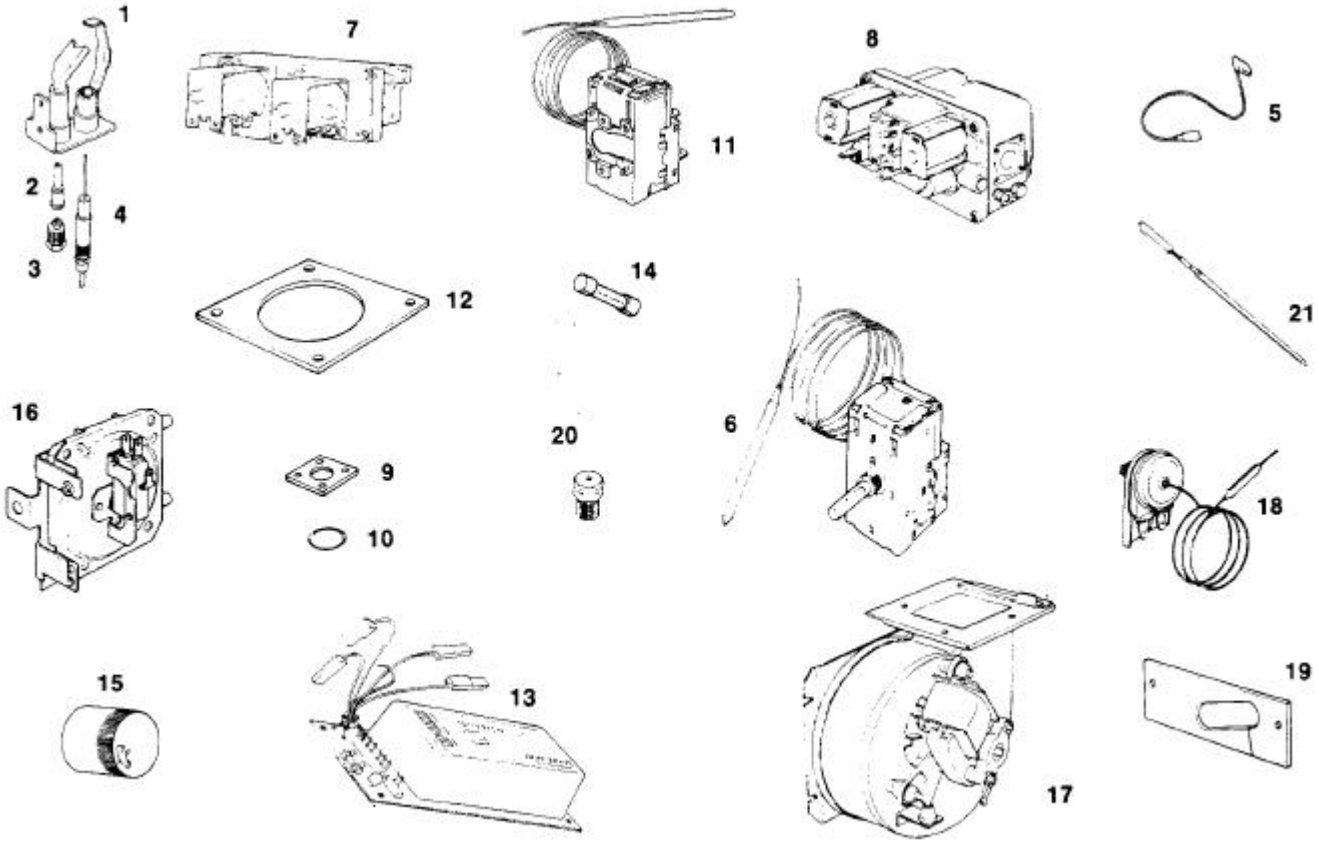

HEALTH AND SAFETY INFORMATION FOR THE INSTALLER AND SERVICE ENGINEER - Page 28

Under the Consumer Protection Act 1987 and section 6 of the Health and Safety at Work Act 1974, **we are required to provide information on substances hazardous to health.**

Small quantities of adhesives and sealants used in the product are cured and present no known hazards.

The following substances are also present.

Insulation & Seals

Material	-	Ceramic Fibre; Alumino – Silicone Fibre
Description	-	Boards, Ropes, Gaskets
Known Hazards	-	Some people can suffer reddening and itching of the skin. Fibre entry into the eye will cause foreign body irritation. Irritation to respiratory tract.
Precautions	-	People with a history of skin complaints may be particularly susceptible to irritation. High dust levels are only likely to arise following **harsh abrasion.** In general, normal handling and use will not present discomfort, follow good hygiene practices, wash hands before consuming food, drinking or using the toilet.
First Aid	-	Medical attention must be sought following eye contact or prolonged reddening of the skin.

Thermostat

Material	-	Contains very small quantity of xylene.
Description	-	Sealed phial and capillary containing liquid.
Known Hazards	-	Irritating to skin, eyes and throat. Vapour is harmful. Inflammable — do not extinguish with water.
Precautions	-	Do not incinerate. Avoid contact with broken/leaking phials. Do not purposely puncture.
First Aid	-	Eye/skin contact, wash with clean water, seek medical attention

Back page

POTTERTON

PROFILE Prima

30e, 40e, 50e, 60e, 80e & 100e

USERS INSTRUCTIONS

IT IS IMPORTANT THAT THE CASE OF THIS APPLIANCE IS NOT REMOVED FOR ANY REASON OTHER THAN FOR SERVICING BY A QUALIFIED SERVICE ENGINEER. THE APPLIANCE MUST NOT BE OPERATED WITHOUT THE CASING CORRECTLY FITTED AND FORMING AN ADEQUATE SEAL.

THIS APPLIANCE IS FOR USE ON PROPANE GAS ONLY.

IT MUST BE INSTALLED AND SERVICED BY A COMPETENT PERSON AS STATED IN THE GAS SAFETY (INSTALLATION AND USE) REGULATIONS 1994.

IF THE APPLIANCE IS INSTALLED IN A COMPARTMENT, DO NOT USE FOR STORAGE PURPOSES AND DO NOT OBSTRUCT ANY PURPOSE PROVIDED VENTILATION OPENINGS.

IF A GAS LEAK OR FAULT IS SUSPECTED TURN OFF THE APPLIANCE AND CONSULT YOUR LOCAL GAS REGION OR SERVICE ENGINEER

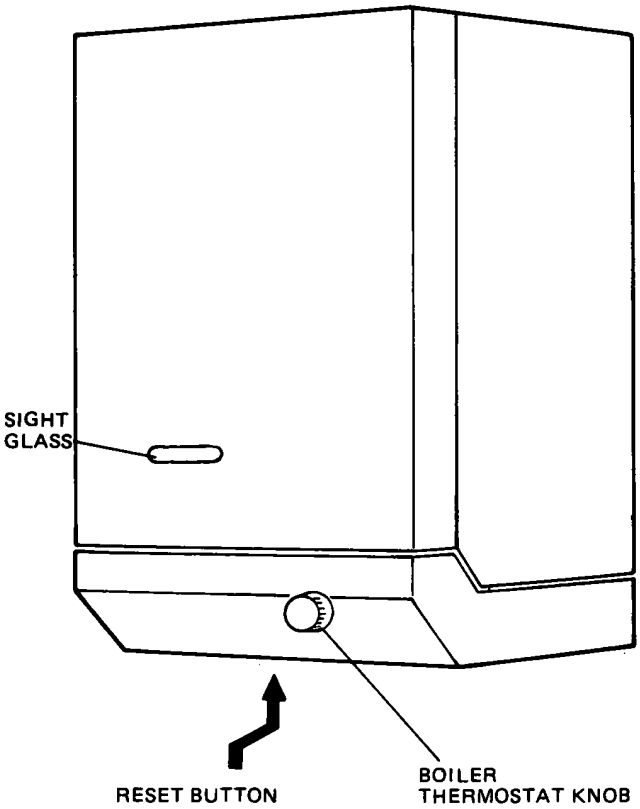

INTRODUCTION

The information given on this card will help you to obtain the maximum comfort from your boiler with the minimum trouble and cost. Your boiler is fully automatic in operation and requires very little attention apart from setting the thermostat.

Regular skilled servicing is required to maintain the safe and efficient operation of your boiler throughout its long working life. Further information on this subject is given at a later stage.

ELECTRICITY SUPPLY

WARNING: THIS APPLIANCE MUST BE EARTHED

Connection shall be made to a 240V~ 50 Hz supply. The appliance must be protected by a 3 amp fuse.

SAFETY

The boiler should have the following minimum clearances for Safety and Maintenance, 610mm (2ft) at the front of the boiler, 5mm (3/l6in) each side, 100mm (4in) at the bottom, 50mm (2in) at the top.

Flammable materials must not be stored in close proximity to the boiler.

Ensure that the flue terminal outside the house does not become obstructed, particularly by foliage.

THE BOILER THERMOSTAT

The boiler thermostat enables you to control the temperature of the water as it leaves the boiler and is also used for turning the boiler on and off. The thermostat knob can be set to O (OFF), 1,2,3,4,5 or Max. The graduations 1 to Max. correspond approximately to a temperature range of 55ºC to 82ºC (130ºF -180ºF).

During the summer months, when the boiler is only being used to supply stored domestic hot water and there is no independent hot water temperature control, the thermostat can be set to position 1 or 2 which will probably be hot enough for bathing or washing up requirements. For washing clothes, a higher setting may be necessary.

In winter weather, when central heating is required, the thermostat knob can be turned up higher but it must be remembered that unless the temperature of the water in the domestic hot water cylinder is independently controlled, the stored hot water could be at a temperature that could scald, i.e. about 82ºC (180ºF).

OTHER CONTROLS

A Potterton Electronic Programmer or other type of clock may have been fitted in your system, together with room and/or cylinder thermostats. Full instructions on the use of these controls should be supplied with them.

1. Ensure that the boiler thermostat knob is at ‘O’ (fully anti-clockwise).
2. Switch ‘ON’ the main electricity supply.
3. Ensure the electronic programmer or other time control, if fitted, is in an ‘ON’ period (refer to time control literature).
4. Ensure that any room and/or cylinder thermostats are at a high temperature setting.

Proceed as follows:-

Turn the boiler thermostat on and to the required setting. After a short period, the boiler will light: the main burner can be seen through the sight glass on the front of the boiler. Set the time control and any thermostats, where fitted, to their desired settings.

NOTE:- When the boiler is first lit, there may be a slight smell. This will disappear with use.

TO SHUT THE BOILER OFF

Turn the boiler thermostat knob to ‘O’, or switch the external programmer to the ‘OFF’ position. To re-light the boiler, simply turn the boiler thermostat ‘ON’ or switch the programmer to the ‘ON’ position.

FOR LONGER SHUT DOWN PERIODS

Turn the boiler thermostat to ‘O’, isolate the electrical supply at the isolating switch, or pull the plug out of its socket.

NOTE

If the system is fitted with a low limit thermostat and protection of the system is required during cold weather, all that is required is for the programmer to be turned to the ‘OFF’ position. This will allow the boiler to cycle if the temperature within the house becomes too low.

IMPORTANT

Gas and electricity are required to operate your boiler. Its performance will not be affected by normal variation in gas or electricity supply, but a gas or electricity failure will put the boiler out of operation. It will automatically re-start when the supply is restored, provided that the time clock and/or thermostats are in an ‘ON’ position.

In the event of your boiler not working, there are several checks you should carry out before calling in a service engineer, as this could save you unnecessary expense.

1 Check that the gas, electricity and water are all turned on at the main supply.

2. Check that the time control, if fitted, is in an ‘ON’ period.

3. Check that all the thermostats in the system are not on low settings.

4. Overheat Limit Thermostat

   The boiler is fitted with a safety thermostat to protect against overheating of the water. Should the boiler fail to light, allow it to cool and press the reset button. Access to the button is through a hole in the underside of the controls cover, see illustration on front page. If the problem persists, turn off the boiler and consult your local Gas Region or Service Engineer.

   NOTE: Interruption of the electrical supply to the boiler may also cause the overheat limit thermostat to operate.

Having checked these points, run through the lighting procedure once more and if the boiler still fails to light, call in your local service engineer.

FROST PRECAUTIONS

If your boiler has to be shut down for several hours or more during very cold weather, it may be in danger of freezing, due to its position, i.e. it may be in an outhouse or part of the pipework may be vulnerable to frost. To avoid freezing, various methods of protection can be used:-

1. Insulation of the boiler and pipework, taking care not to impede any ventilation or air supply.

2. Completely draining the water system if not in use for long periods. On a sealed system, draining and refilling must be carried out by a competent person, e.g. your Service Engineer.

   NOTE:

   Although the system can be emptied by using the drain-off taps installed in the pipework around the system, to empty the boiler, it is necessary to remove the drain cap which is situated within the boiler case. This operation is best left to your Service Engineer.

3. Having a low limit thermostat fitted. Seek advice from your installer.

NOTE:

If a low limit thermostat has been fitted, it cannot operate if the boiler is completely shut down and the electricity supply is turned off. In this instance, the system will have no protection and one of the other methods must be used.

4. Where no frost protection is provided it may be necessary to run the boiler at low thermostat settings at times when it would normally be shut off.

Back page

POTTERTON

PROFILE Prima

LPG 50e, 60e, 80e & 100e fanned balanced flue gas fired boilers

THIS APPLIANCE IS FOR USE WITH PROPANE GAS ONLY

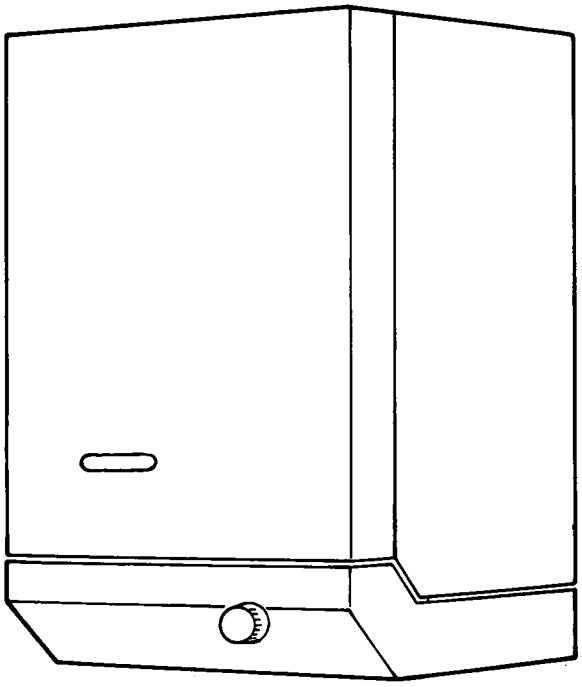

Installation and Servicing Instructions

LEAVE THESE INSTRUCTIONS ADJACENT TO THE APPLIANCE

IMPORTANT
This appliance must be installed and serviced by a competent person as stated in the Gas Safety (Installation and Use) Regulations 1984. Profile Prima LPG boilers have been designed to comply with the requirements of BS 5258 Part 11986 and BS 6332 Part 11983. It is important that no external control devices (e.g. flue dampers, economisers, etc.) be directly connected to these appliances unless covered by these installation instructions or otherwise recommended in writing. Any direct connection of a control device not approved by Potterton could invalidate the normal warranty.

LIST OF CONTENTS - Page 2

GENERAL - Page 2

Profile Prima LPG boilers are fully automatically controlled wall mounted *fan* powered balanced flue appliances, using a cast iron heat exchanger and are available in four outputs. 15.1 kw (51,500 Btu/h r), 18.88kw (64,400 Btu/hr), 23.4 kw (80,000 Btu/hr), 29.3 kw (100,000 Btu/hr).

The boilers which are designed to provide domestic hot water and/or central heating must be used on INDIRECT FULLY PUMPED systems only, which may be sealed or open vented.

The boilers can be supplied with either of the following types of flue system.

PRIMA LPG 100e MODEL ONLY
1 metre horizontal flue system which provides a maximum flue length of 955mm (37in).

Vertical flue system which allows the flue to pass through a flat roof and terminate at a maximum height of 980mm (38in) measured from the top of boiler case.

PRIMA LPG 50e, 60e, & 80e Models only
Standard horizontal flue system which is suitable for a wall thickness of 100mm (4in) to 510mm (2Oin).

2 metre horizontal flue system which provides a maximum flue length of 1955mm (77in).

Vertical flue system which allows the flue to pass through a flat roof and terminate at a maximum height of 1980mm (78in) measured from the top of boiler case.

OPTIONAL EXTRAS - Page 2

The following are kits available as optional extras:—

Internal Fitment Kit, which is suitable for a maximum wall thickness of 51 0mm (20 in.) is to be used where access to the outside wall is impracticable.

Pump Cover Kit, located on top of the boiler and is designed to conceal the pump, and/or any motorised valves installed above the boiler. (**Note:** Pump cannot be fitted above the boiler if the vertical flue kit is used).

Terminal Wall Plate, where necessary can be fitted to the outside wall face to improve the appearance, after making good around the terminal.

Terminal Guard, to be used when the terminal is fitted less than 2m above a balcony, above ground or above a flat roof to which people have access.

Full fitting instructions are provided with each kit.

	PART Nos			
	50e	60e	80e	100e
Standard Flue System	225175	225176	225176	N/A
1 metre Flue System	N/A	N/A	N/A	225289
2 metre Flue System	225178	225179	225179	N/A
Vertical Flue System	225280	225281	225282	225162
Terminal Wall Plate	212306	212280	212280	212280
Terminal Guard	205792	205792	205792	413246
Internal Fitment Kit	225183	225I84	225184	225184
Pump Cover Kit	225181	225181	225132	225182

The following range of Potterton system controls are also available and further information will be provided on request.

Electronic Programmer E.P. 2001, E.P. 3001, E.P. 4001, E.P. 6000.

Programmable Electronic Thermostat PET 1.

ACCESSORIES

Thermostatic Radiator Valve Myson
Electronic Cylinder Thermostat PTT2
Electronic Room Thermostat PRT2
Spring Return Zone Valve PMV2
Spring Return Diverter Valve PMV3

INSTALLATION DATA - Page 3

The installation of the boiler must be in accordance with the latest relevant requirements of the Gas Safety (Installation and Use) Regulations 1984, local building regulations, lEE Wiring Regulations and the Byelaws of the Local Water Undertaking.

Detailed recommendations are contained in the following British Standards and Codes of Practice.

B56798, BS5440 Part 1, BS 5482 Part 1
B55440 Part 2 BS5449 Part 1
B55546 B54814 B56891
BUILDING REGULATIONS 1985.
MODEL WATER BYELAWS.
BRITISH GAS PUBLICATION DM2.
GAS SAFETY (INSTALLATION AND USE) REGULATIONS 1984.
BUILDING STANDARDS (SCOTLAND) REGULATIONS.

BOILER DIMENSIONS - Page 3

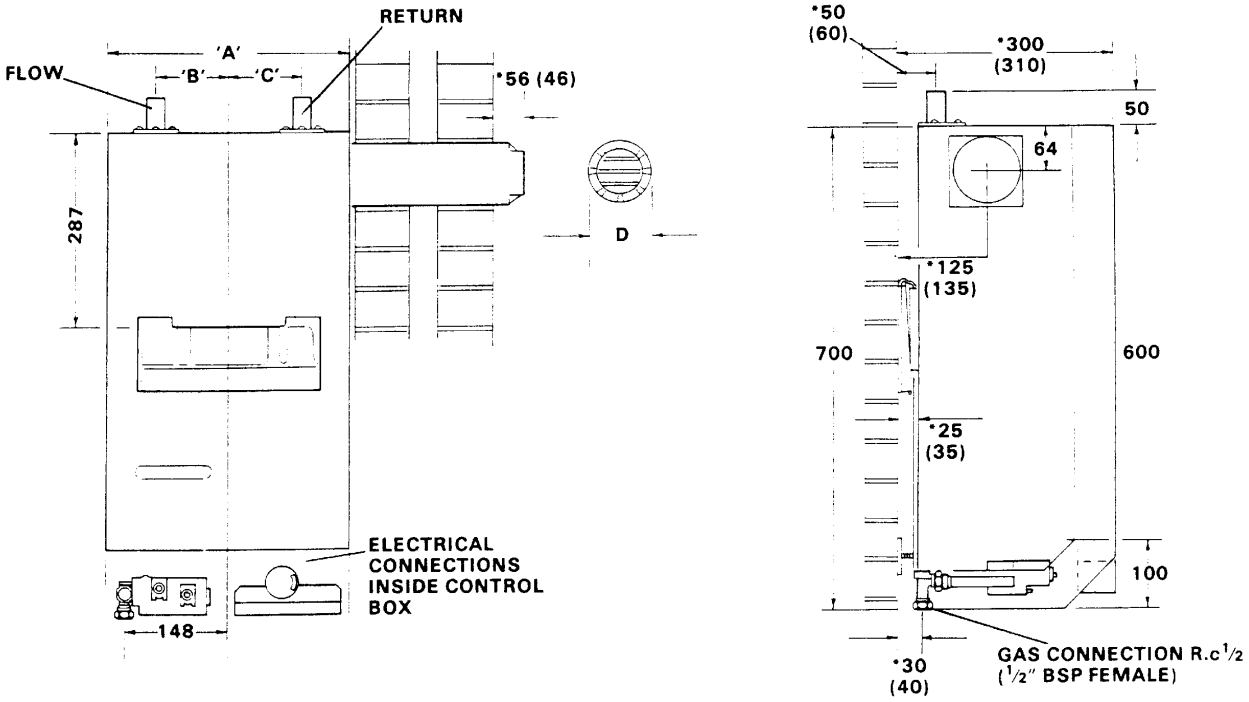

FIG. 1

Boiler	50e	60e	80e	100e
Dimension 'A'	350	350	425	425
(MM) 'B'	110	110	150	150
'C'	103	103	143	143
'D'	90	107	107	107
Flow/Return	22mm	22mm	28mm	28mm
Connections	Copper	Copper	Copper	Copper

*NOTE
IF PIPEWORK IS TO BE RUN DOWN THE BACK OF THE BOILER THE NORMAL CLEARANCE OF 25mm BETWEEN THE REAR OF THE BOILER AND WALL CAN BE INCREASED TO 35mm IF DESIRED BY INVERTINGTHE BOILER MOUNTING PLATE DURING INSTALLATION
Dimensions in brackets apply when the mounting plate is inverted).

SITE REQUIREMENTS - Page 3

These boilers are not suitable for external installation and should not be fitted directly above a cooking appliance. The appliance may installed in any room except a cellar or basement. Particular attention is drawn to the requirements of the current I.E.E. Wiring Regulations and in Scotland, the electrical provisions of the Building Standards applicable in Scotland with respect to the installation of the appliance in a room containing a bath or shower.

Where a room-sealed appliance is installed in a room containing a bath or shower, any electrical switch or appliance control, utilising mains electricity should be so situated that it cannot be touched by a person using the bath or shower.

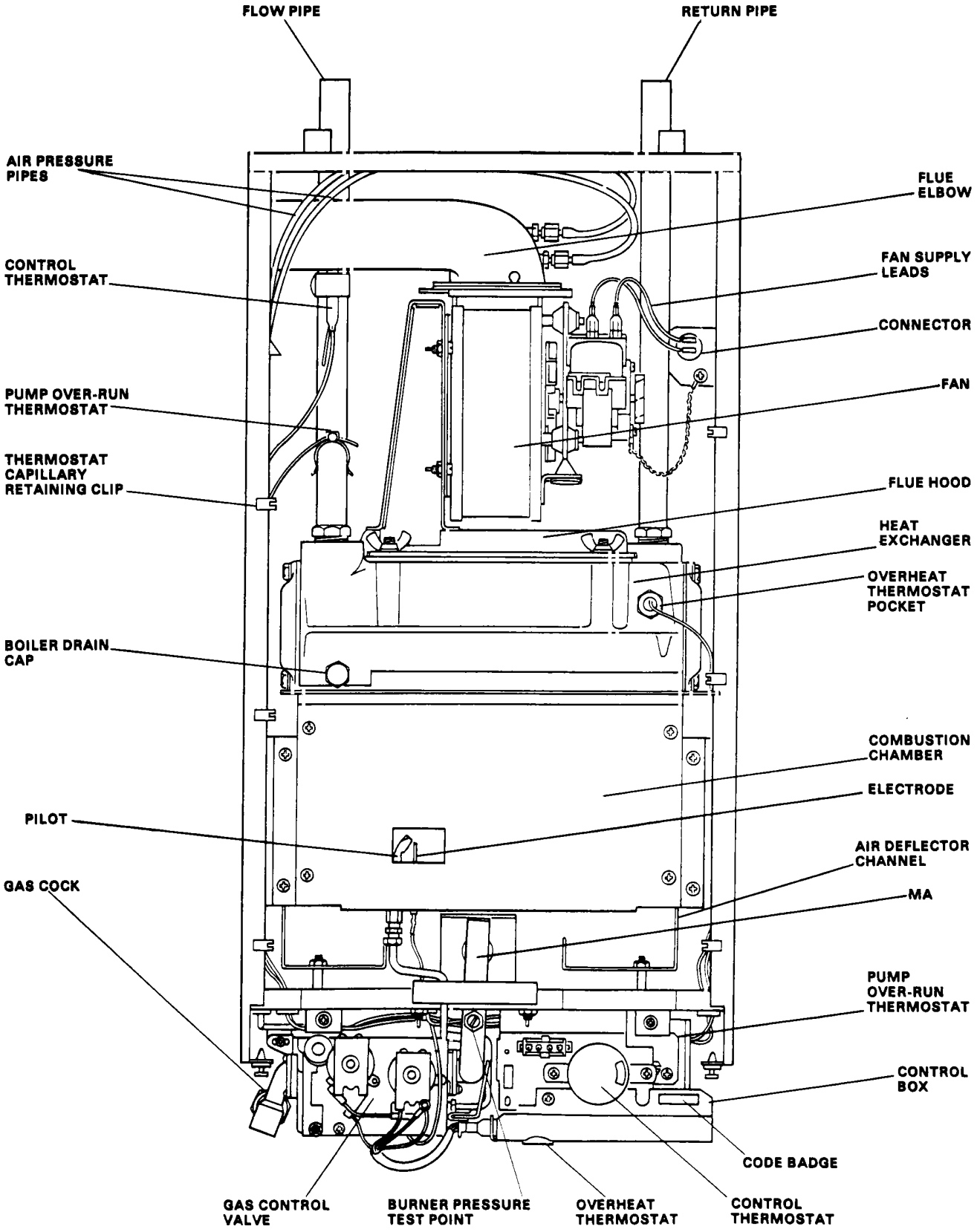

FIG. 2 GENERAL ARRANGEMENT

Where the installation of the boiler will be in an unusual location, special procedures may be necessary and BS 6798 1987 gives detailed guidance on this aspect.
Ensure that the gas supply pipe and meter if fitted are installed in accordance with BS5482 Part 1. Check that they are large enough for this appliance and any others that may be run off the same supply. If in doubt seek advice from the Propane gas supplier.

Boiler Mounting Surface
The boiler must be mounted on a flat wall, which may be of combustible material and must be sufficiently robust to take the weight of the boiler. The requirements of the local authorities and the Building Regulations must be adhered to.

IMPORTANT NOTICE:
TIMBER FRAMED HOUSES
If the appliance is to be fitted in a timber framed building, it should be fitted in accordance 'with British Gas Publication DM2 'Guide for Gas Installations in Timber Framed Housing'.

Clearances Around the Boiler
The following minimum clearances must be maintained after installation, for correct operation and servicing of the boiler:

61 0mm (2 ft) at the front of the boiler

5mm (0.2 in) each side of the boiler

50mm (2 in) at the top (measured from the top of the boiler case), except where the optional extra pump cover is to be fitted, when 178mm (7 in) should be allowed.

100mm (4 in) at the bottom of the boiler.

Additional clearances to these are required during installation for lifting the boiler and 127mm (5 in) is required at the top of the boiler for access to the pipe connections.

Ventilation
If the boiler is to be installed in a confined space such as a cupboard, the space will need ventilating. Openings must be provided at the top and bottom of the cupboard each of which should have a free area as shown in TABLE 1. Further details for installation of a boiler within a compartment are given in BS 6798 1987.

TABLE 1

PROFILE PRIMA	**AIR VENT AREAS**	
	in²	cm²
50e	27	174
60e	33	213
80e	43	277
100e	54	349

If the openings draw air from outside the building the free areas may be halved. Refer to BS 5440 Part 2 1976 for further guidance.

Balanced Flue Terminal and Ducting
The fresh air inlet and flue ducts can be run from either the left, right, rear or top of the boiler to a miniature terminal on the outside of the building.

The minimum spacings from the terminal to obstructions and ventilation openings are shown in FIG. 3. For information appertaining to horizontal flue lengths reference should be made to FIG. 4.

If a terminal is fitted less than 2m above a balcony, above ground or above a flat roof to which people have access then a suitable terminal guard should be fitted. (P.I.L. No. 205792).

Refer to B55440 Part 1 1978 for further guidance.

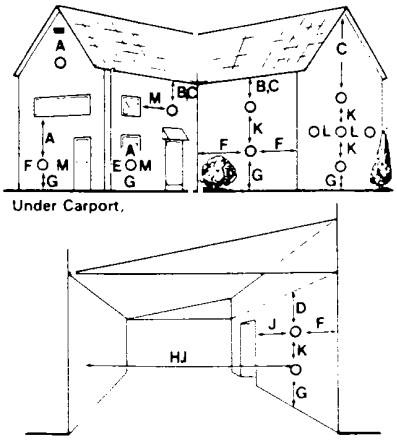

FIG. 3 THE SITING OF BALANCED FLUE TERMINALS

INFORMATION RELATING TO VERTICAL FLUING IS PROVIDED IN THE PACK CONTAINING THE VERTICAL FLUE SYSTEM.
NOTE
Where a flue terminal is fitted less than 1000mm from a plastic or painted gutter or 500mm from painted eaves, an aluminium shield of 1000mm length should befitted to underside of gutter or eaves.

Any car port or other add-on extension should consist of a roof or a roof and one other wall. If it consists of a roof and two other walls – the installation shall be treated as suspect and further advice sought.

POSITION		MINIMUM DISTANCE
A.	DIRECTLY BELOW AN OPENABLE WINDOW, AIR VENT, OR ANY OTHER VENTILATION OPENING	300
B.	BELOW GUTTER, DRAIN/SOIL PIPE	75
C.	BELOW EAVES	200
D.	BELOW BALCONY OR CAR PORT ROOF	200
E.	FROM VERTICAL DRAIN PIPES AND SOIL PIPES	75
F.	FROM INTERNAL OR EXTERNAL CORNERS	300
G.	ABOVE ADJACENT GROUND OR BALCONY LEVEL	300
H.	FROM A SURFACE FACING THE TERMINAL	600
I.	FACING TERMINALS	1,200
J.	FROM OPENING (DOOR/WINDOW) IN CARPORT INTO DWELLING	1,200
K.	VERTICALLY FROM A TERMINAL ON THE SAME WALL	1,500
L.	HORIZONTALLY FROM A TERMINAL ON THE SAME WALL	300
M.	ADJACENT TO OPENING	150

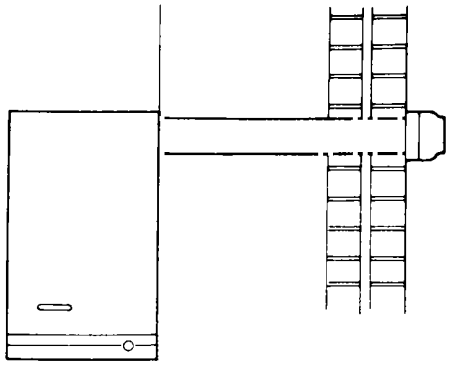

FIG. 4 FLUE SETTINGS

	MAXIMUM LENGTH 'X'
1 METRE FLUE SYSTEM 100e MODEL ONLY	955mm (37in)
STANDARD FLUE SYSTEM 50e, 60e, & 80e MODELS ONLY	510mm (20in)
2 METRE FLUE SYSTEM 50e, 60e, & 80e MODELS ONLY	1955mm (77in)

ELECTRICITY SUPPLY

A 240 volts— 50Hz, single phase electricity supply fused to 3 amperes, must be provided in accordance with the latest edition of the I.E.E. Wiring Regulations and any other local regulations that may apply. The current rating of the wiring to the boiler must exceed 3 amperes and have a cross sectional area of at least0.75mm^2 in accordance with BS 6500. Table 16.The supply to the boiler and its associated equipment should be controlled by a 3A fused double pole switch (having at least 3mm contact separation in both poles)so that complete isolation from the supply can be achieved to enable servicing work to be carried out in safety.

TECHNICAL DATA - Page 6

Maximum working head	30.5m (100ft)
Minimum working head	150mm (6in)
Gas supply pressure	20 mbar
Maximum flow temperature	82°C
Electricity supply	240v—5OHz fused at 3A
Internal Fuse	Type T1A
Power Consumption	80 Watts (excluding pump)
Gas supply connection	Rc. ½ (½in BSP female)

	50e & 60e Models	**80e & 100e Models**
Appliance lift weight (mm)	26.0kg (57.3lbs)	33.5kg (73.871bs)
Appliance weight installed	37.1kg (81 .8Ibs)	46.4kg (102.3lbs)
Water content	2.0 litre (0.44 gal)	2.4 litre (0.53 gal)
Flow/Return connections	22m copper	28mm copper

BOILER SIZE	INJECTOR SIZE	GAS RATE at 95.0 MJ/m3 (2500 Btu/W) m3/h (W/h)	INPUT kW (Btu/h)	OUTPUT kW (Btu/h)	BURNER PRESSURE mbar (in wg)	SUPPLY PRESSURE mbar (in wg)
50e	2.2mm	0.73 (25.8)	18.88 (64,400)	15.1 (51,500)	35.7 (14.3)	37 (14.8)
60e	2.4mm	0.89 (31.4)	23.0 (78,500)	18.4 (62,800)	35.7 (14.3)	37 (14.8)
80e	2.7mm	1.13 (40.0)	29.31 (100,000)	23.45 (80,000)	34.1 (13.7)	37 (14.8)
100e	3.0mm	1.42 (50.0)	36.64 (125,000)	29.3 (100,000)	33.2 (13.3)	37 (14.8)

CIRCULATION PUMP SELECTION

The resistance through the heat exchanger when operating with a water flow rate producing an 11 0C temperature rise at maximum boiler output are shown in TABLE 2. If other controls, such as three-position valves are used in the system, the resistance through them, quoted in their manufacturer's literature must be taken into account The pump may be fitted on either the flow or return and MUST be wired directly to the boiler terminal block, see FIG. 23. It must be fitted with two isolating valves which are positioned as close to the pump as possible. Closing of any valve must always leave the open vent unobstructed.

TABLE 2

Boiler size	Water Flow Rate		BOILER RESISTANCE	
	Litres/sec	gal. min	kN.m	in wg
50e	.32	4.17	4.25	17.0
60e	.38	5.0	6.25	25.0
80e	.51	6.67	7.0	28.0
100e	.64	8.4	11.0	44.0

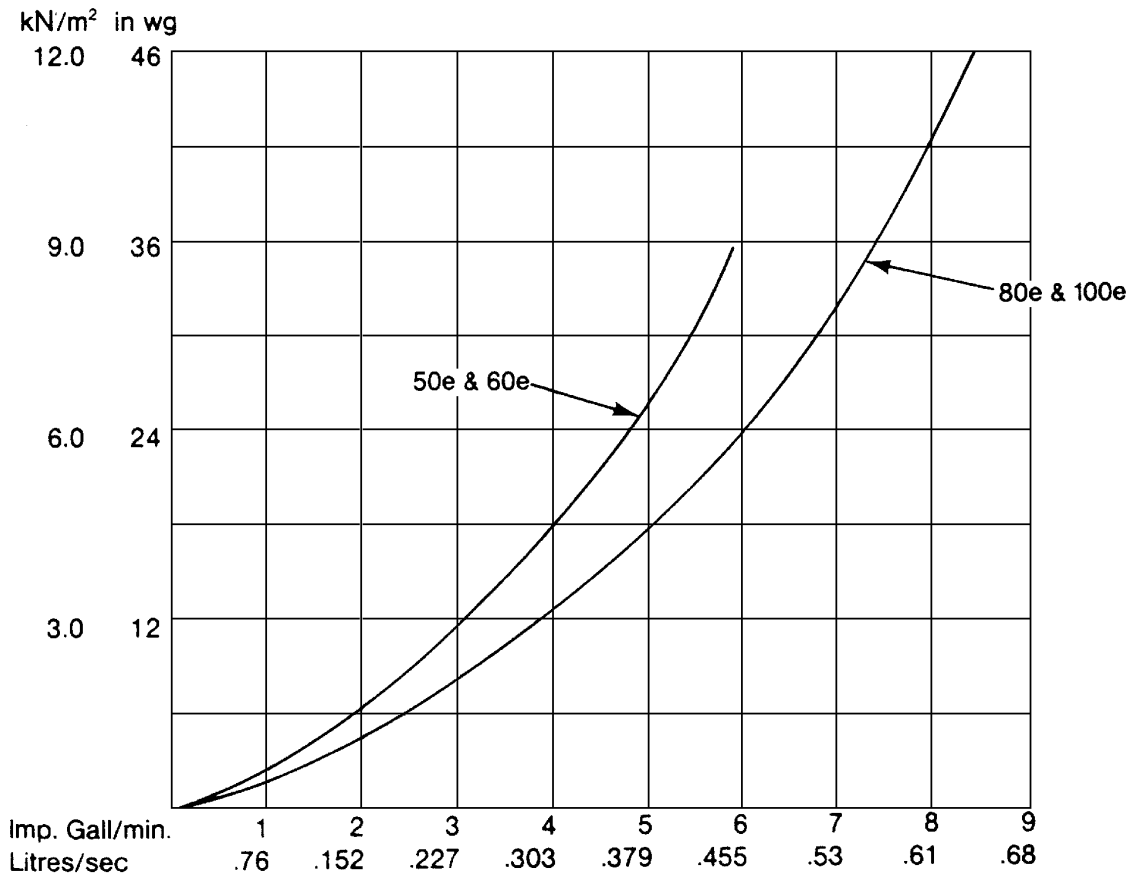

FIG. 5 PRESSURE LOSS ACROSS BOILER

The System

The boiler must be used on INDIRECT FULLY PUMPED systems only, which may be sealed or open vented.

The system should be designed so that the maximum static head does not exceed 30.5m (100ft) and a minimum of 150mm (6in). See FIG 6.

On all systems the pump should be wired to the boiler terminal block, it will then be controlled by the pump over-run thermostat. This will ensure that the pump will continue to run after boiler shut down if the water temperature is high, thus preventing nuisance operation of the overheat thermostat.

It is important that where electrically operated zone valves are used the boiler is wired so it does not cycle when the zone valves are closed. Also, systems fitted with controls that close both hot water and central heating circuits while the boiler is still hot, must be fitted with a by-pass circuit to dissipate the residual heat from within the boiler.

If a three port diverter valve is used as shown in FIGS. 6,7 a by-pass is not necessary since one circuit is always open.

Where a pair of two port valves are used, a by-pass is necessary. The total length of the by-pass circuit taken from the boiler connections should be greater than 4 metres of 22mm pipe. It should be fitted with a lockshield valve and be adjusted to maintain a minimum flow through the boiler of 4.5 litres/mm (1 gal/mm) see FIGS 6, 7.

Systems fitted with controls which allow the boiler to operate when both the hot water and central heating circuits are closed i.e. mechanically operated thermostatic control valves, must be fitted with a by-pass circuit capable of:-

1. Dissipating a minimum of 1 kW (3400 Btu/h).

2. Maintaining a minimum water flow through the boiler of 9 litres/mm (2 gal/mm).

A suggested method of meeting these requirements by using a bathroom radiator fitted with two lockshield valves is shown in FIGS. 6, 7.

Additional system information can be found in the Control Systems, Pipework and Wiring Guide.

Drain off taps should be fitted in the pipework close to the boiler and in the low points of the system.

NOTE
Although the system can be emptied using the drain off taps installed in the pipework around the system, to empty the boiler it is necessary to remove the drain off cap positioned within the boiler case. See FIG. 2.

SEALED SYSTEMS

Installation

The installation must comply with the requirements of BS 6798 1987 and BS 5449 Part 1. The B.G. publication “British Gas Specification for Domestic Wet Central Heating Systems” should also be consulted.

Safety Valve

A non-adjustable spring-loaded safety valve, preset to operate at 3 bar (451bf/in2) shall be used. It must comply with BS 6759 Part 1 and include a manual testing device. It shall be positioned in the flow pipe either horizontally or vertically upwards and close to the boiler. No shut-off valves are to be placed between the boiler and the safety valve. The valve should be installed into a discharge pipe which permits the safe discharge of steam and hot water such that no hazard to persons or damage to electrical components is caused.

Pressure Gauge

A pressure gauge incorporating a fill pressure indicator, covering the range 0-4 bar (6Olbf/in2) shall be fitted to the system. It should be connected to the system, preferably at the same point as the expansion vessel. Its location should be visible from the filling point.

Expansion Vessel

A diaphragm type expansion vessel to BS4814 Part 1 shall be fitted close to the inlet side of the pump. The connecting pipework should not be less than 15mm (1/2in nominal). Pipework connecting the expansion vessel should not incorporate valves of any sort. Methods of supporting the vessel are supplied by the manufacturer. The nitrogen or air charge pressure of the expansion vessel shall not be less than the hydrostatic head (height of the top point of the system above the expansion vessel). To size the expansion vessel it is first necessary to calculate the volume of water in the system in litres. The following volumes may be used as a conservative guide to calculating the system volume.

Boiler Heat Exchanger:	6.5 litres
Small Bore Pipework:	1 litre per kW of system output
Micro Bore Pipework:	7 litres
Steel Panel Radiators:	8 litres per kW of system output
Low Water Capacity Radiators:	2 litres per kW of system output
Hot water Cylinder:	2 litres

If the system is extended, the expansion vessel volume may have to be increased unless previous provision has been made for the extension. Where a vessel of the calculated size is not available, the next available larger size should be used.

The boiler flow temperature is controlled at approximately 82°C.

The vessel size can now be determined from the following table where V=System volume in litres

Vessel Charge Pressure(bar)	0.5	1.0
Initial System Pressure (bar)	1.0	1.0
Expansion Vessel Volume (litres)	V x 0.11	V x 0.087

Cylinder

The hot water cylinder must be an indirect coil type or a direct cylinder fitted with an immersion calorifier suitable for operating at a gauge pressure of 0.3 bar (5lbf/in^2) in excess of safety valve setting. Single feed indirect cylinders are not suitable for sealed systems.

Method of Make-Up

Provision shall be made for replacing water loss from the system either:—

i) from a make-up vessel or tank mounted in a position higher than the top point of the system, and connected through a non-return valve to the system on the return side of hot water cylinder or the return side of all heat emitters.
or

ii) where access to a make-up vessel would be difficult by using the mains top up method or a remote automatic pressurisation and make-up unit as illustrated in FIG. 7 METHODS 1 and 2.

Mains Connection

There shall be no connection to the mains water supply or to the water storage tank which supplies domestic water even through a non-return valve, without the approval of the local Water Authority.

Filling Point

The system shall be fitted with a filling point at low level which incorporates a stop valve to BS1 010 and a double check valve (approved by the National Water Council) to be fitted in this order from the system mains, Refer to FIG. 7. Method 1.

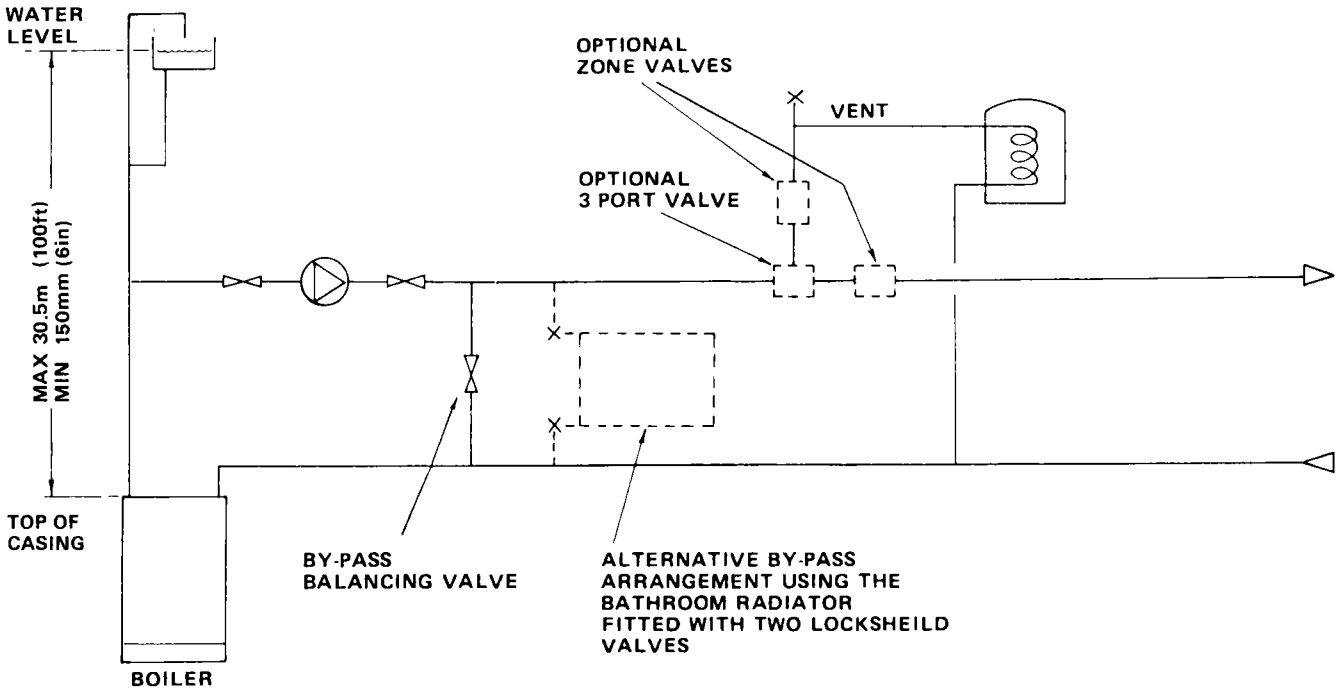

FIG. 6 OPEN VENTED FULLY PUMPED SYSTEM FITTED WITH A COMBINED FEED AND VENT

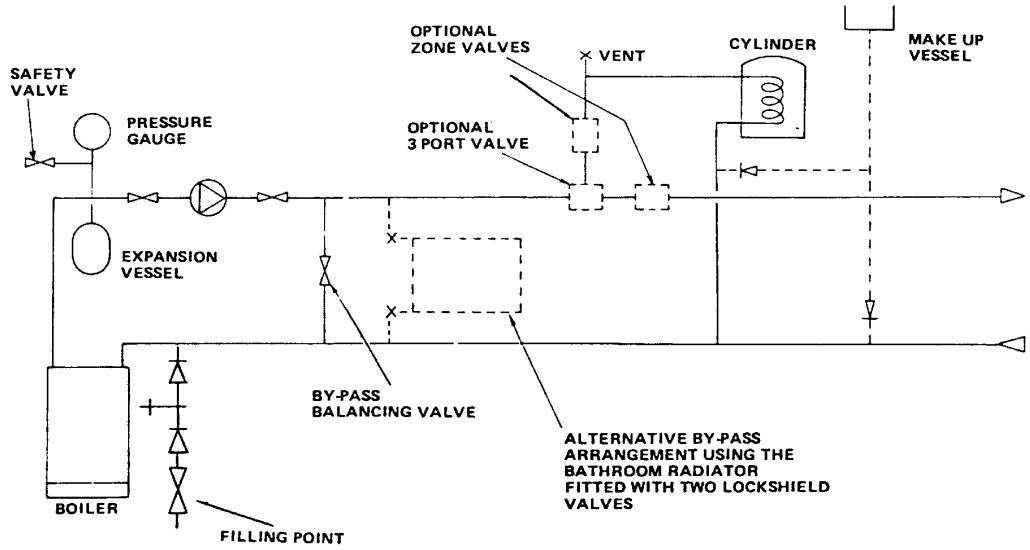

Two methods of filling a sealed water system

METHOD 1
MAINS TOPPING-UP METHOD

NOTE: This method of filling a sealed system may only be used if acceptable to the Local Water Undertaking

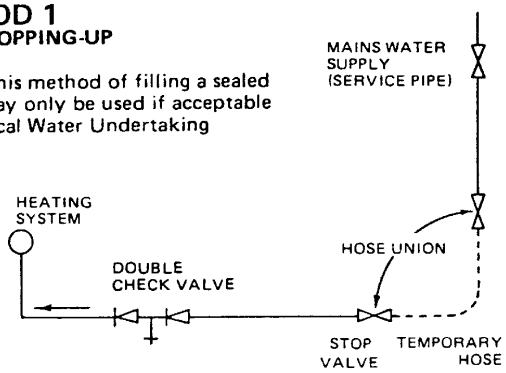

METHOD 2
CISTERN FILLING METHOD

NOTE: Cistern to be supplied through a temporary connection from a service pipe or cold water distributing pipe

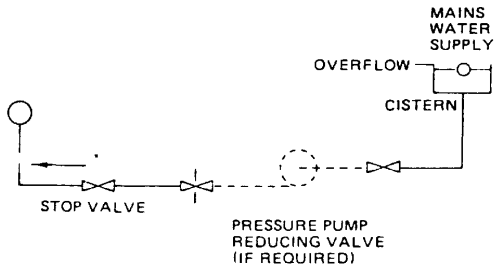

FIG 7. FULLY PUMPED SEALED SYSTEM

It is the law that all gas appliances are installed and serviced by competent persons as stated in Gas Safety (Installation and Use) Regulations 1984. For Health and Safety Information see back page.

The boiler and its associated equipment will arrive on site in two cardboard cartons. The contents of each carton is as follows.

CARTON 1:— Boiler Pack

Boiler
Template
- Literature Pack Containing:—
  - Installation and Servicing Instructions
  - User's Instructions
  - Control Systems Pipework and Wiring Guide

Auxiliary Pack Containing:—
- Boiler Mounting Bracket
- Gas Service Cock and Accessory Packs

CARTON 2:—Flue System Pack

Horizontal Flue Packs
- Air/Flue Duct Assembly (length as ordered)
- Flue Elbow Extension
- Flue Terminal
- Flue Sealing Collar
- Rope Sealing Ring
- Side Infill Panels—2 off

Vertical Flue Pack (2 cartons)
- Air/Flue Duct Assembly
- Flue Terminal
- Terminal Cowl
- Vertical Flue Adapter
- Accessory Pack
- Side Infill Panels—2 off
- Flue Installation Instructions

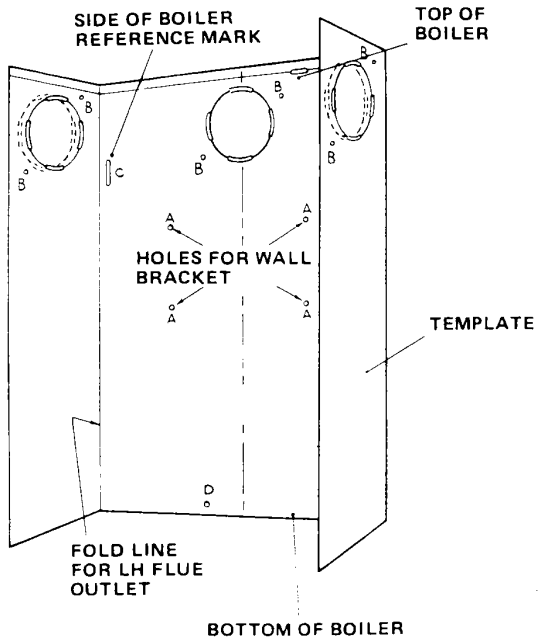

FIG. 8 TEMPLATE

Place template in proposed boiler position ensuring it is level (the minimum side clearances are automatically allowed for)

REAR FLUING

Mark holes 'A', 'B', 'D', large flue outlet hole and side of boiler reference lines throught slots 'C'.

SIDE FLUING

Mark hole positions 'A', 'D' and side of boiler reference lines through Slots 'C'.

Mark large flue outlet hole and holes 'B' using the thick lines on the template for minimum clearance at the rear of the boiler and the thin dotted lines for maximum clearance. See NOTE on FIG. 1

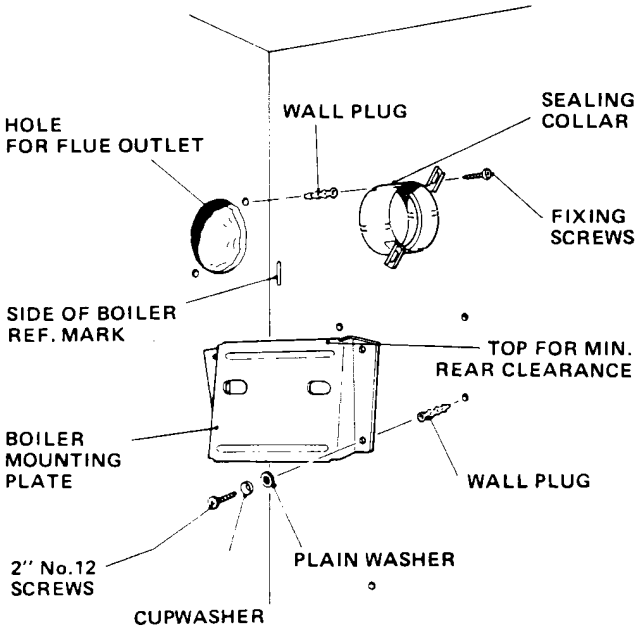

FIG. 9 BOILER MOUNTING PLATE

Remove template and carefully cut flue outlet hole through wall. If necessary make good around hole to enable holes 'B' to be drilled. (If internal flue fitment kit is being used refer to instructions supplied with kit).
Drill holes 'A' using a 7 mm drill
Drill holes 'B' and 'D' using a 5 mm drill

Using wall plugs, screws and washers (accessory pack A) attach boiler mounting plate to wall. Ensure that it is level and the correct way up, i.e. to provide the clearance at the rear of the boiler allowed for when marking out using the template. See also NOTE on FIG. 1.

Insert wall plugs into holes 'B' (accessory pack B) and hole D' (accessory pack D).

Insert flue sealing collar into wall and secure with screws provided, (accessory pack B). Make good the internal wall surface around flue sealing collar.

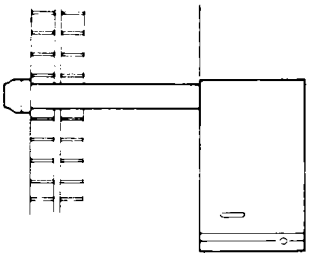

FIG. 10a SIDE FLUE

1. Measure from outside face of wall to the side of boiler casing reference line (dimension ‘x’).
2. Take air/flue duct assembly and measuring from the flanged end, mark and cut the outer duct and inner flue duct to dimension ‘x’ plus 20mm. Ensure that both ducts are cut squarely.

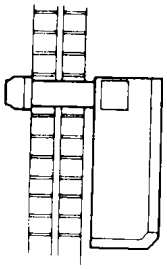

FIG. 10b REAR FLUE

1. Measure wall thickness (dimension ‘Y’).
2. Take air/flue duct assembly and measuring from the flanged end, mark and cut the outer air duct and inner flue duct to dimension ‘Y’, plus 45 mm. Ensure that both ducts are cut squarely.

NOTE
Cutting length remains the same for minimum or maximum clearance at the rear of the boiler.

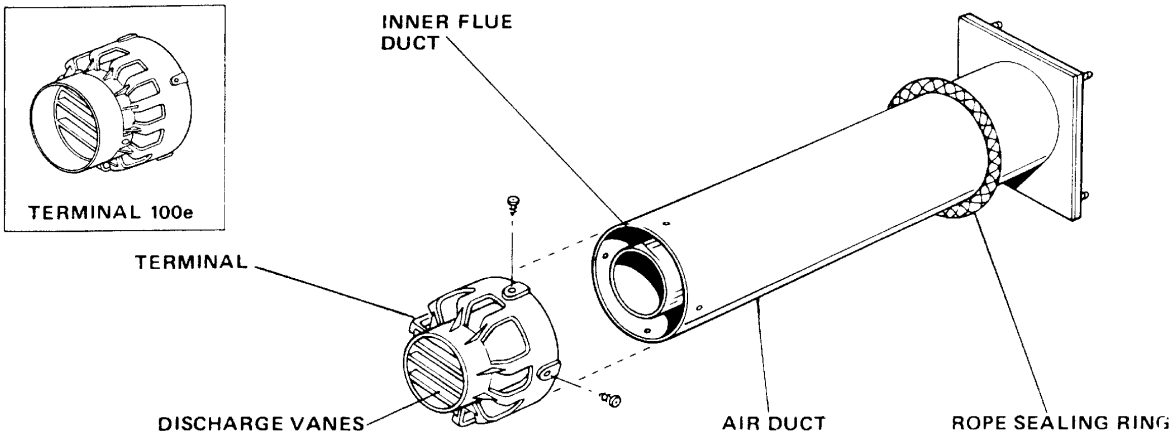

FIG. 11 AIR/FLUE DUCT ASSEMBLY

1. Slide rope sealing ring on to air duct.

2. Engage the terminal on to the ends of the inner flue duct and outer air duct with its discharge vanes arranged to deflect the flue products in the desired direction. Press terminal fully home.

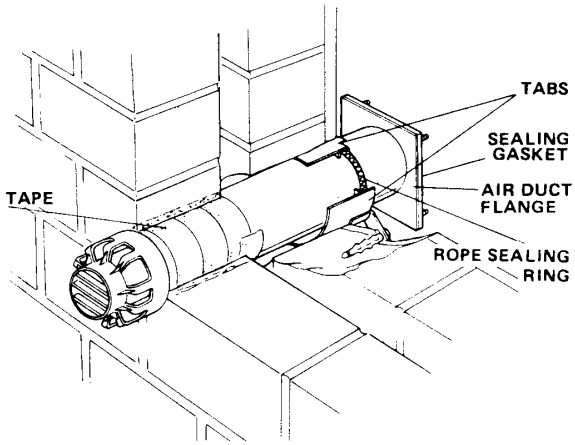

FIG. 12 SECTIONAL VIEW OF AIR/FLUE DUCT ASSY THROUGH WALL

3. Engage four screws from accessory pack ‘C’ into the pre-drilled holes in the terminal and screw fully home. These screws which are self drilling will pierce the air duct and secure the terminal to air duct

4. Protect duct where it is likely to come into contact with mortar by using adhesive tape provided (accessory pack E).

5. Insert the assembly into the wall sliding the rope sealing ring along the air duct into the flue sealing collar. Bend the six tabs on flue sealing collar inwards to retain the rope sealing ring. Ensure air duct flange studs do not obstruct lifting of boiler onto mounting bracket.

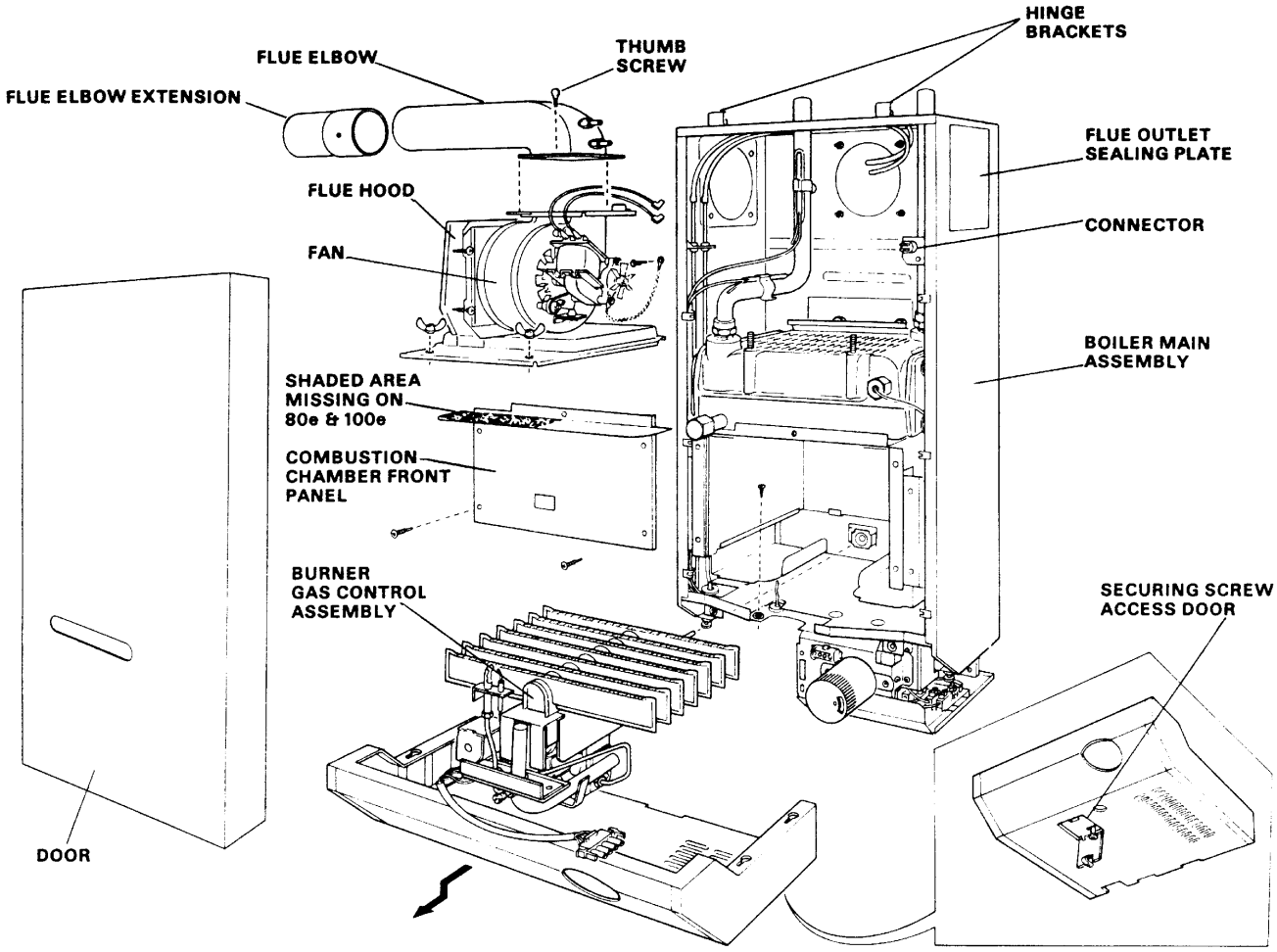

FIG. 13 PREPARING THE BOILER

The controls cover should have been removed when unpacking the boiler, if not remove controls cover by opening the door covering the securing screw on the underside of controls cover, see FIG 13.

Undo securing screw, pull controls cover forward 10 mm, lower to release from four side fixings and pull forward clear of thermostat knob.

Remove the door by undoing the lower fixing screws and lift door off the two upper hinge brackets.

Disconnect the two flexible tubes from the flue elbow.

Remove thumb screw securing the flue elbow and remove elbow by sliding forward to disengage it from its rear retaining flange.

NOTE
The boiler is supplied with the left hand flue outlet sealing plate removed. If another flue outlet direction is required, remove the appropriate flue outlet sealing plate and transfer it to the left hand position.

The boiler may now be lifted onto its mounting bracket or if desired the appliance liftweight can be further reduced by removing the fan/fluehood assembly also the burner/ gas control assembly as follows.

1. Removing fan/fluehood assembly.

   Disconnect the fan supply and earth leads from the connector adjacent to the fan. Remove the two wing nuts securing the flue hood to the heat exchanger. Uft out fan/fluehood assembly.

2. Removing burner/gas control assembly.
   Remove the screws securing the combustion chamber front panel and remove panel. Unplug the electrical supply leads for the gas control valve from the control box.

   Remove the screw securing the gas control valve to its support bracket.

   Disconnect electrode lead from electrode. Remove two screws securing the burner assembly to the bottom of the boiler case and lift out the burner/gas control assembly.

LIFTING THE BOILER

Lift the boiler onto its mounting bracket.

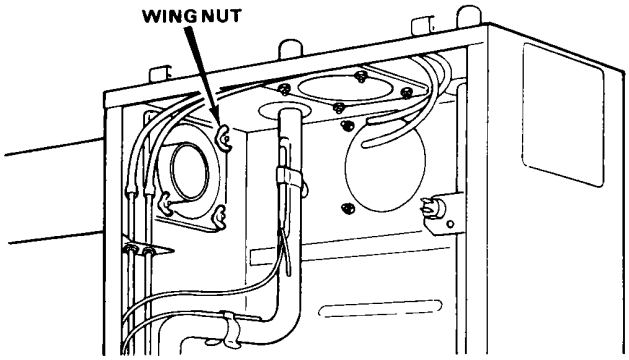

FIG. 14

Locate the studs on the air duct flange through the boiler casing and secure using four wing nuts (accessory pack F).

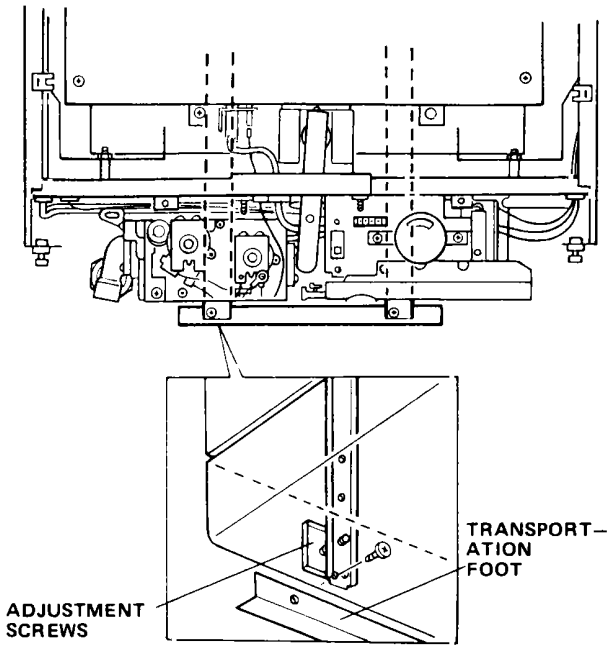

FIG. 15 TRANSPORTATION FOOT

Position boiler on its mounting bracket so that the sides of the boiler line up with the reference lines ‘C’ on the rear wall. Undo the two screws securing the transportation foot and discard foot. Vertical alignment with rearwall can be corrected using the adjustment screws at the rear of the boiler. See FIGS. 15 & 16.

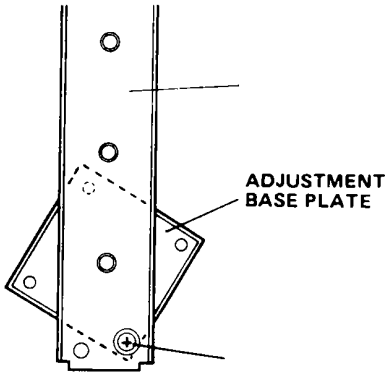

FIG. 16 SECURING BOILER

Rotate the left hand adjustment screw to align one of the holes in the base plate with hole ‘D’ in the wall. Working through the hole in the leg, secure the base plate to the wall using the screw from accessory pack D. Make good the wall surface around the flue terminal. Fit optional terminal wall plate if required.

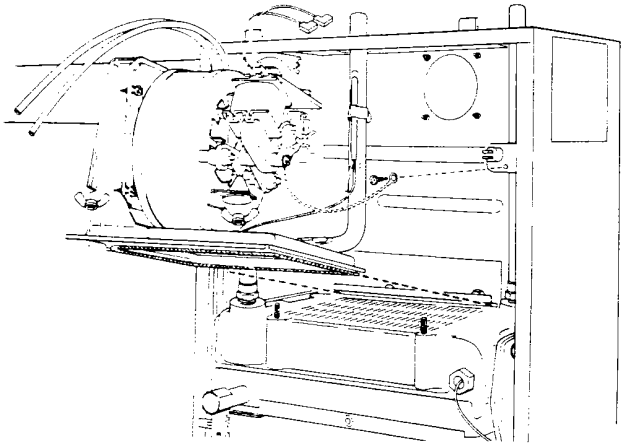

FIG. 17

If the fan/fluehood assembly or burner/gas control assembly were removed to reduce the appliance lift weight, refit them to the boiler. Reassembly is the reverse of removal. When refitting the burner/gas control assembly ensure that the locating pin on the rear of the burner engages correctly into the rear support bracket.

When refitting the fan/fluehood assembly ensure that the rear of the fluehood is correctly located beneath retaining flange. See FIG. 17.

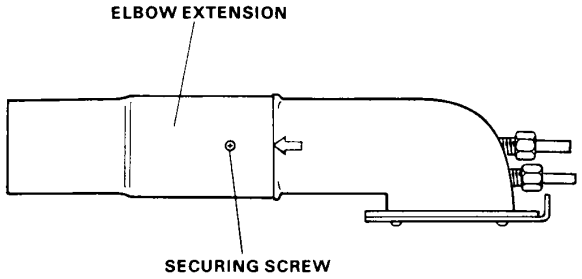

FIG. 18 FLUE ELBOW EXTENSION

When side fluing, slide the elbow extension onto the elbow, push on fully and align the hole for securing screw with arrow on elbow. Engage the screw from accessory pack ‘C’ into the pre-.drilled hole in elbow extension and screw fully home. The screw which is self drilling will pierce the elbow and secure the extension to the elbow.

When rear fluing, the elbow extension should be discarded.

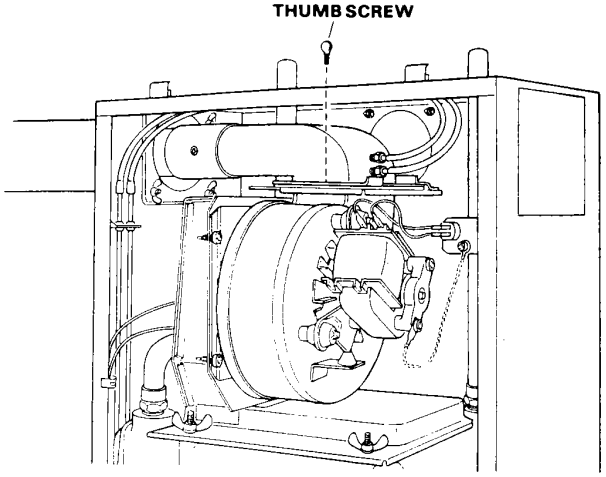

FIG.19 LOCATION OF PRESSURE SENSING TUBES

Slide the flue elbow into the flue duct, ensure that the sealing gasket is in place and the elbow is correctly located beneath the retaining flange at the rear. See FIG.19.

Secure elbow using thumb screw previously removed.

Reconnect flexible tubes to elbow.

ENSURE THEY ARE NOT KINKED.
The tubes are supplied at the length required for left hand flue outlet. When using rear or right hand flue outlets, to avoid kinking, the tubes should be shortened by 150mm. A band around the tube indicates the cutting point.
NOTE
Red tube connects the front aluminium tube to the lower connection on the elbow, each being identified with a red ring.

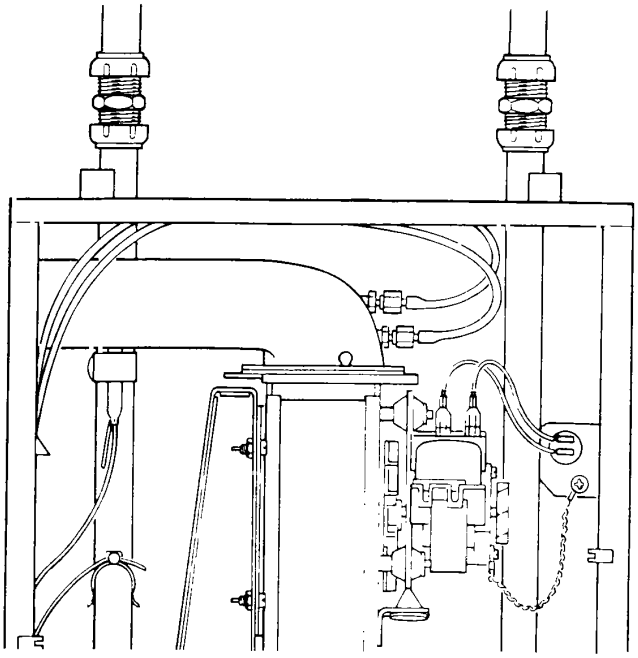

FIG. 20 PIPE CONNECTIONS

Connect system pipework to the boiler, compression fittings should be used. If however capillary fittings are used it is essential to temporarily remove both of the thermostat bulbs from the flow pipe before soldering.

A drain off tap should be installed close to the boilerif it is in a low point of the system. Connect the gas supply pipe to the inlet of the gas cock. Ensure the gas cock is in a position where it can be easily operated when the controls cover is removed.

ELECTRICAL

The boiler and all external control circuit wiring must be supplied from the same single isolating switch or plug and socket, and should be fused at 3A.

Care must be taken to ensure that all wiring to the boiler is kept clear of sharp edges and hot surfaces.

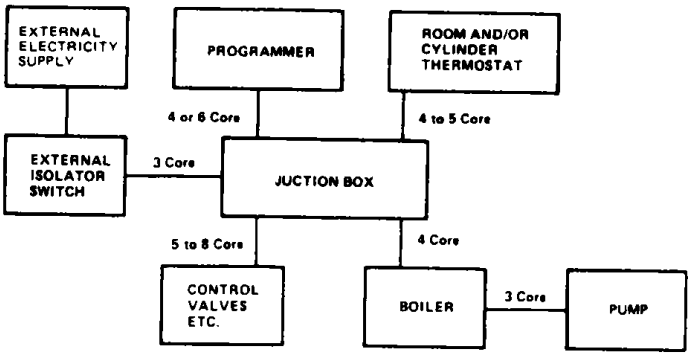

FIG. 21 PRINCIPLE OF WIRING

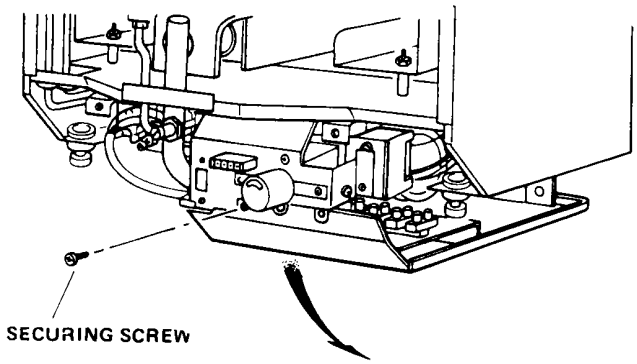

FIG. 22 ACCESS TO THE BOILER ELECTRICAL TERMINAL BLOCK

The boiler terminal block which is situated in the control box is not designed to accept wiring from all the on site controls and therefore the installer will usually need to incorporate a suitable junction box. This may not be required if a Potterton Electronic Programmer is used as this incorporates a junction box. The principle of wiring is shown in FIG. 21. Further information on wiring of system controls can be found in the Control System, Pipework and Wiring Guide. Remove control box securing screw and lower the control box to gain access to the boiler terminal block.
FIG. 22 ACCESS TO THE BOILER ELECTRICAL Remove packaging from rear of the control box.

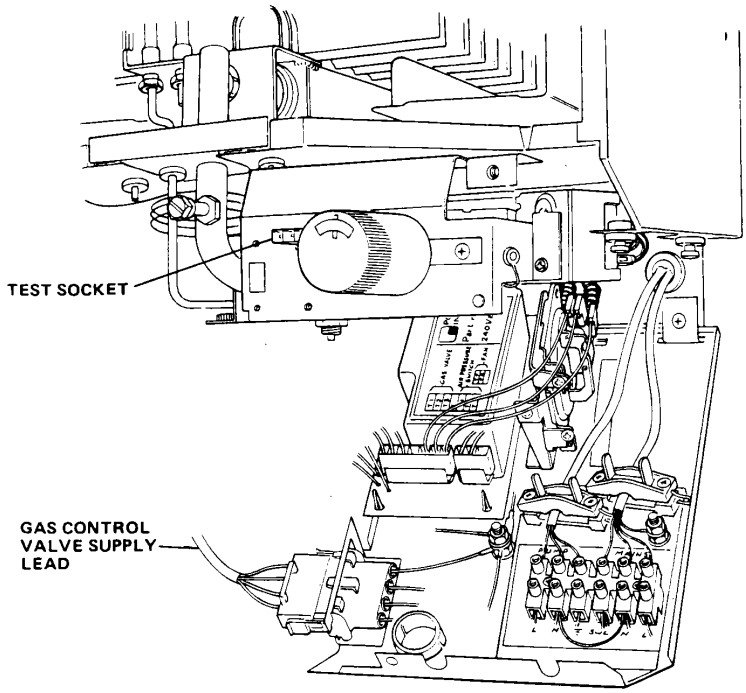

FIG. 23 ROUTING OF ELECTRICAL WIRING

Following the pump manufacturer's instructions connect the pump supply wires to terminals marked PUMP LN ⏚ on the boiler terminal block. Route the cable through the plastic bush in the rear of the control box as illustrated in FiG. 23 and secure, using the cable clamp.

Route a four core cable through the plastic bush in the rear of the control box and the cable clamp as illustrated in FIG. 23 and connect it to the boiler input terminals as follows:

Permanent live to terminal marked MAINS 'L'.
Neutral to terminal marked MAINS 'N'.
Earth to terminal marked ⏚ adjacent to cable clamp.
See NOTE.
Switched live from external controls to terminal marked MAINS 'SwL'.
If there are no external controls fitted connect the SwL terminal to permanent live in the junction box.

NOTE:
Ensure that the earth conductor is longer than the L, N & SwL from the point of anchorage, so that the current carrying conductors become taut before the earth conductor if cable is pulled out of the cable clamp.
When the wiring has been completed close the control box and replace the securing screw.

FITTING SIDE INFILL PANELS

If required, the gap between the casing sides and rear wall can be closed off using the infill panels supplied.

Minimum or maximum rear boiler clearance is catered for by turning the infill panel. Attach each infill panel to the rear of the boiler using two pieces of magnetic strip (accessory pack G) positioned as illustrated.

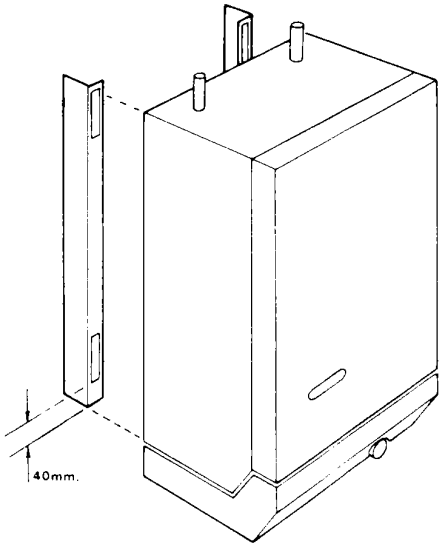

FIG. 24

Open Vented Systems

Remove the pump and flush out the system thoroughly with cold water. Refit the pump. Fill and vent the system. Examine for leaks.

Sealed Systems

NOTE:

The system can be filled using a sealed system filler pump with a break tank or by any other method approved by the Local Water Authority. Refer to 'THE SYSTEM' section Page 8 in these instructions, also BS 6798 1987.

Remove pump and flush out the System thoroughly with cold water. Refit the pump. Fill and vent the system until the pressure gauge registers 1.5 bar (21.5 lbf/in^2). Examine for leaks. Raise the pressure until the safety valve lifts. This should occur within ± 0.3 bar of the preset lift pressure of 3 bar. Release water to attain the correct cold fill pressure, and set the indicator on the water gauge to this value.

All Systems

The whole of the gas installation including the meter should be inspected and tested for soundness and purged in accordance with the recommendations of BS 6891.

Test pilot unions for gas soundness as follows:— Turn boiler thermostat to the '0' position.

Unplug the gas control valve supply lead from the control box and plug it into the test socket adjacent to the boiler thermostat knob, See FIG. 23.

Turn on gas at the gas service cock.

Ensure that the time control if fitted is in an ON condition and that the room and/or cylinder thermostats where fitted are set to high temperatures.

Switch on the external electricity supply to the boiler.

Gas will flow to the pilot only. It will not be ignited as the ignition system is de-energised.

Using a leak detection fluid, check pilot unions for gas soundness.

Turn off the external electricity supply and gas service cock.

Remove gas control valve plug from the test socket and refit the plug into the socket on the left hand side of the control box. See FIG. 23.

Refit the combustion chamber front panel.

Fit the case door into position by lifting it onto the top hinge brackets and secure it with the lower two fixing screws.

First Lighting

WARNING: Before lighting the boiler, ensure that the CASE DOOR HAS BEEN CORRECTLY FITTED and that the sealing strip fitted to the case door is forming a tight seal with the main boiler casing. Before proceeding to light the boiler, check that the external electricity supply to the boiler is switched off and that the boiler thermostat is in the '0' position.

Turn on the gas service cock.

Ensure that the pump and radiator isolating valves are open.

Ensure that the time control, if fitted is in an on condition, and that the room and/or cylinder thermostats, where fitted are set to high temperatures.

Switch on the external electricity supply to the boiler.

After installation of the appliance, preliminary electrical system checks must be carried out. The checks to be carried out are:—

A. Earth Continuity
B. Short Circuit
C. Polarity
D. Resistance to Earth

Refer to Fault Finding Chart FIG. 30

Turn the boiler thermostat on and to a high setting and after a period of time the main burner will light, this can be observed through the sight glass in the front cover of the boiler. The time period can vary upwards of 45 seconds, depending on the amount of air in the pipework.

Test for gas soundness around the boiler components using leak detection fluid.

Turn the boiler thermostat to '0'.

NOTE:

There could be a delay in lighting if the control knob is switched on and off and then on again rapidly

SETTING AND CHECKING OF CONTROLS

With the controls cover removed.

Fit a pressure gauge to the pressure test nipple in burner supply pipe. See FIG. 2.

Turn on the boiler thermostat and ensure that the main burner is alight.

Ten minutes after lighting check that the burner pressure is in accordance with the values stated under TECHNICAL DATA. On the first main burner ignition of a newly installed boiler, supplied from a new bulk storage installation, some noise may be emitted due to air in the pipeline. This noise may persist on subsequent ignitions for a day or two according to usage, until any air remaining in the supply system has been purged.

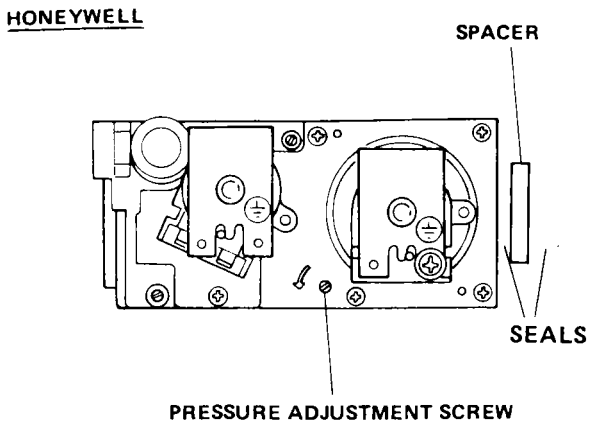

FIG. 25 MAIN BURNER PRESSURE ADJUSTMENT

Shut down the boiler remove the pressure gauge and refit the screw in the test nipple ensuring that a tight seal is made.

Refit the controls cover.

Relight the boiler and heat the system to maximum. Check for water leaks, turn the boiler off, drain the system whilst hot.

Refill the system and on sealed systems adjust to the correct cold fill pressure. Set the pressure gauge pointer to the system design pressure.

If a by-pass circuit is fitted the by-pass valve should be adjusted with the boiler operating under minimum load conditions to maintain sufficient water flow through the boiler to ensure that the overheat thermostat does not operate under normal operating conditions.

Pilot Burner

The pilot is pre-set and no adjustment is required. The pilot flame envelope should cover the electrode tip, see FIG. 29. If the pilot flame is not as illustrated, remove and clean the pilot as described in the Servicing Instructions Section 4, PILOT BURNER, Page 22.

Boiler Thermostat

At its minimum and maximum settings, the thermostat should control the water flow temperature at approximately 55^0C—82^0C (130^0F—180^0 F).
The thermostat has been calibrated by the makers and no attempt should be made to re-calibrate it on site. Turn the thermostat to the ‘0’ position and check that the main burner shuts down.

Pump Over-Run Thermostat

Will keep the pump running after the boiler has shut down, as long as the water temperature within the boiler is above 80°C.
The thermostat is preset and no adjustment is possible.

Overheat Thermostat

The overheat thermostat is pre-set and no adjustment is possible. It will require manually resetting if an overheat condition occurs. Access to the reset button is through a hole in the underside of the controls cover, see FIG. 2.

Other Boiler Controls

All boiler mounted controls are designed so that if any fault should occur they will fail safe. No further setting or checking is necessary.

External Controls

Check that any other external control connected in the system, such as clocks and thermostats, control the boiler as required.

User’s Instructions

A User’s Instructions leaflet is provided with this boiler but the householder must have the operation of the boiler and system explained by the Installer. The householder must also be advised of the importance of annual servicing and of the precautions necessary to prevent damage to the system and building, in the event of the system remaining out of commission in frost conditions.

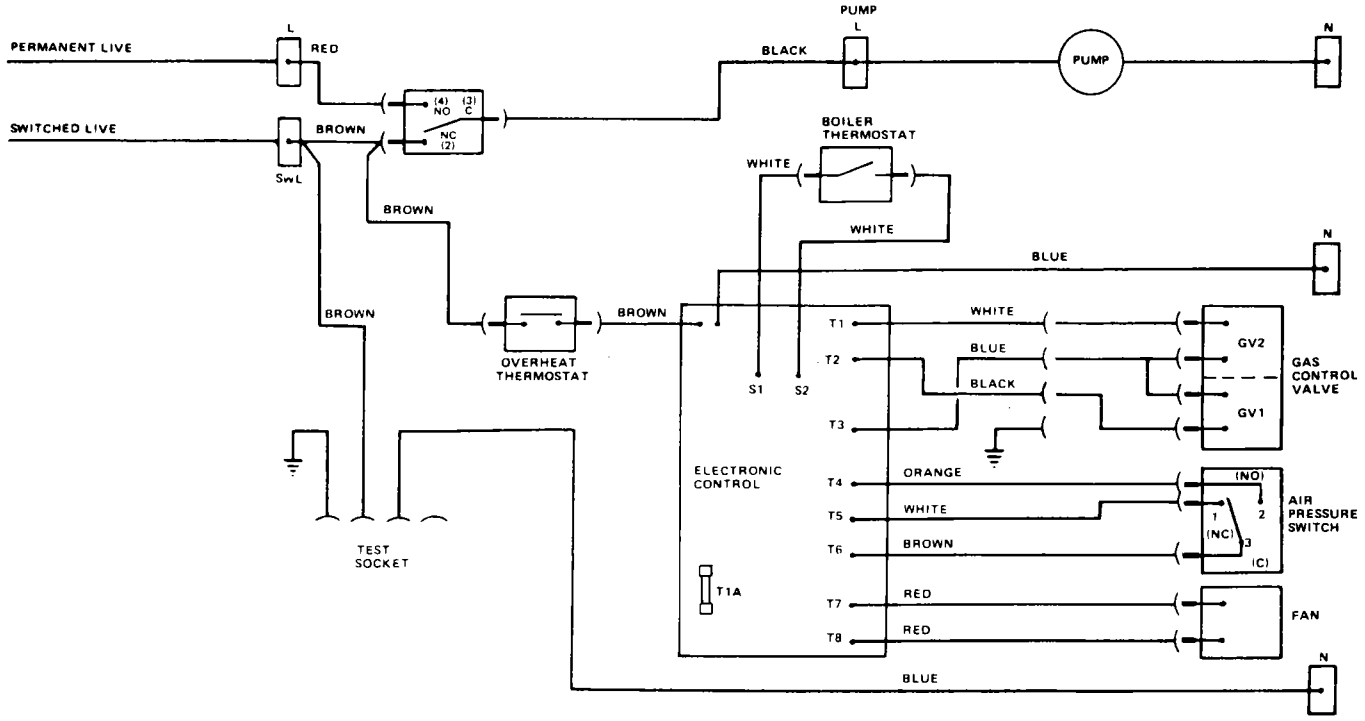

FIG. 26 FUNCTIONAL FLOW DIAGRAM

HONEYWELL

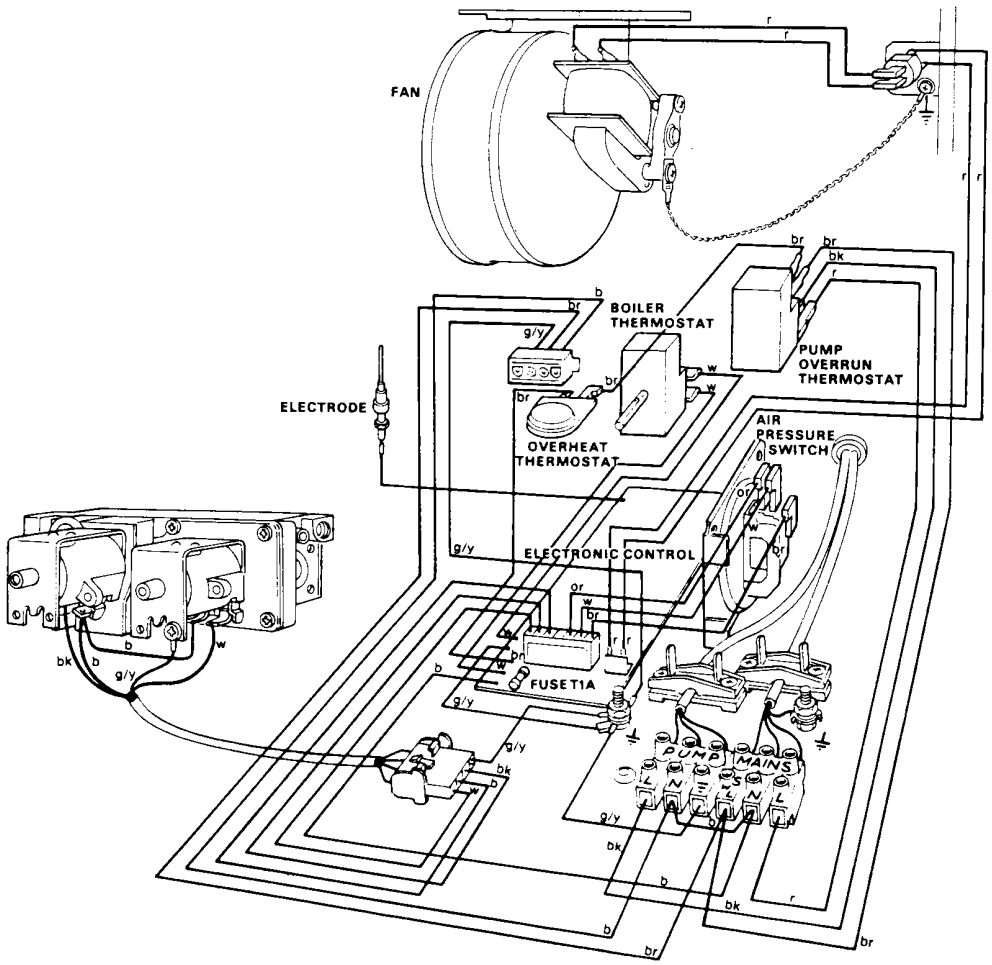

FIG. 27 BOILER WIRING DIAGRAM

Regular skilled servicing and cleaning of the appliance is essential to ensure continued safe and efficient operation. The frequency of cleaning will depend upon the particular installation conditions, and the use to which the appliance is put, but in general, once per year should be adequate.

It is the law that all gas appliances are installed and serviced by competent persons as stated in Gas Safety (Installation and Use) Regulations 1984.
For Health and Safety Information see back page.

Servicing is best arranged by a contract placed with Potterton Myson Limited and further details are available from the local Potterton Regional Service Office.

The boiler DATA PLATE and WIRING DIAGRAM are attached to the inside of the controls cover. The boiler CODE NUMBER which should be quoted when ordering spares or requesting information is on the front of the control box. See FIG. 2.

All parts likely to require servicing are readily accessible. By removing the cover from the boiler controls and removing the front door from the boiler, most components are exposed. Remove the front of the combustion chamber to gain access to the main and pilot burner and the ignition electrode.

Removal of the flue elbow, fan and fluehood will expose the flueways in the heat exchanger for cleaning.

The following notes apply to the boiler and its controls but it should be remembered that attention must also be paid to the heating circuit itself including radiator valves, thermostats, the time control and the expansion and feed water system. It is advisable to clean the boiler immediately after the end of the heating season.
In all cases prior to servicing, light up the boiler and check that the pilot and main burners have a clean, even flame and that the main burner pressure is correct. If the pilot flame is satisfactory, no further servicing of the pilot burner is necessary and the information given in '4. PILOT BURNER' can be ignored.

WARNING

Before the start of any servicing work, switch off at the external electricity supply by disconnecting the supply plug at the socket or switching off the external isolating switch. Turn off the gas service cock.
NOTE: After completing any servicing or replacement of components check for gas soundness and carry out functional checks.

1. **PREPARING THE BOILER FOR SERVICING**
   See FIG. 13.

   NOTE: Boilers with side or rear flues have a flue elbow fitted to the fluehood.

   The elbow is replaced by an adapter on vertically flued boilers.

   A. Remove controls cover by opening the door covering the securing screw on the underside of the controls cover, see FIG. 13. Undo securing screw, pull controls cover forward 10mm, lower it to release it from its four side fixings and pull forward clear of the thermostat knob.
   B. Remove door by undoing the lower fixing screws and lift door off the two upper hinge brackets

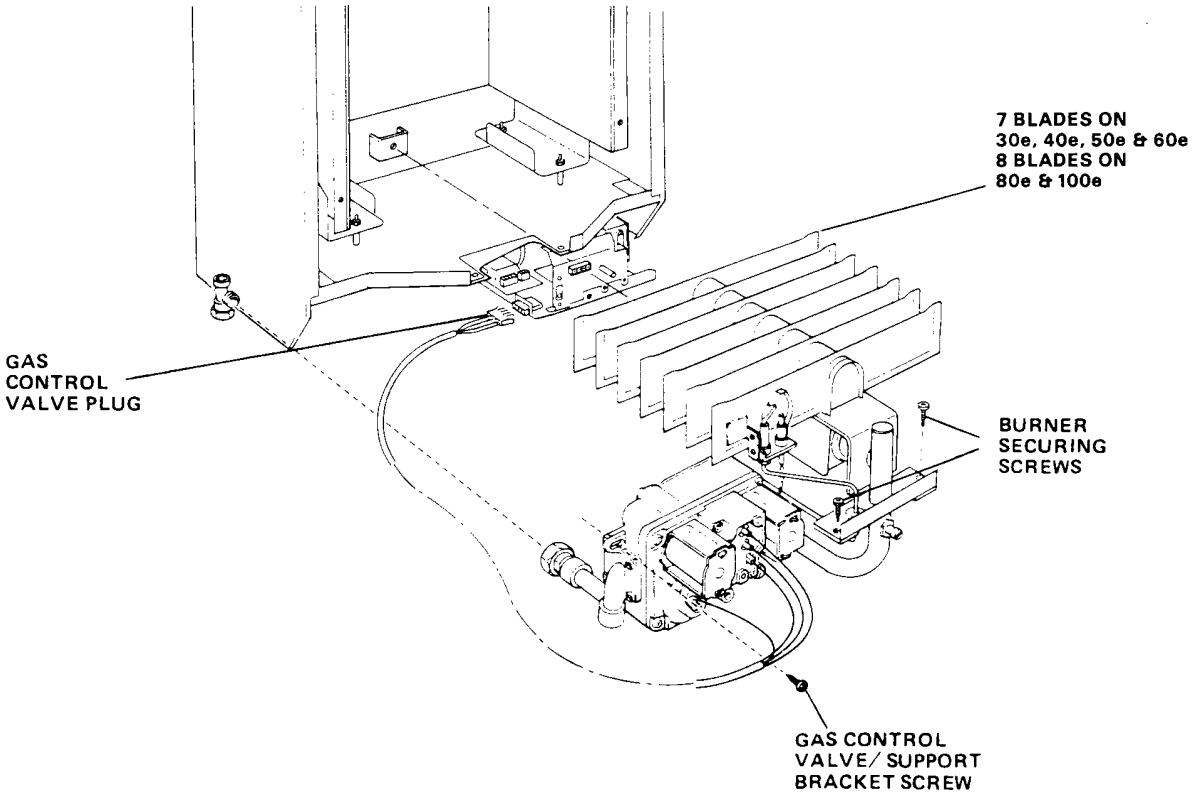

FIG. 28 BURNER AND GAS CONTROL ASSEMBLY

C. Remove screws securing the combustion chamber front panel and remove panel.

D. Disconnect the two flexible tubes from the flue elbow.

E. Remove thumb screw securing the flue elbow and withdraw elbow. Take care not to damage the gasket. On vertically flued boilers remove two thumb screws and slide the vertical flue adapter up into the flue duct.

F. Disconnect the fan supply and earth leads from the connector adjacent to the fan. Remove the two wing nuts securing the flue hood to the heat exchanger. Lift out fan/flue hood assembly.
Lower and lift out vertical adapter.

G. Undo the union on the gas service cock outlet.

H. Unplug the electrical supply leads forthe gas control valve from control box. See FIG. 28.

I. Remove the screw securing the gas control valve to its support bracket. See FIG. 28.

J. Disconnect the electrode lead from electrode.

K Remove two screws securing the burner assembly to the bottom of the boiler case and lift out the burner and gas control assembly.

2. HEAT EXCHANGER

A. Working from above and below the heat exchanger use a suitable tool and remove all deposits from between the fins.
Slide vertical flue adapter into flue duct.

3. FAN

A. Separate fan from fluehood by removing the two securing screws.

Carefully clean any deposits from around the fan motor and its supports. Examine the fan wheel and clean if necessary using a soft brush.

Re-assemble fan to fluehood ensuring that the sealing gasket is in place and in good condition. Ensure also that the fan is located correctly in the rear retaining bracket. Secure with two screws.

B. Refit the fan/fluehood assembly. Ensure that the rope seal is in place and the rear of the fluehood is correctly located beneath the retaining flange. See FIG. 17. Secure with two wing nuts.

C. Slide flue elbow into the flue duct or lower flue adapter and secure with thumb screws. Ensure that the gasket between fan outlet and elbow or adapter is undamaged and in place.

D. Reconnect the flexible tubes to elbow or adapter. ENSURE THEY ARE NOT KINKED.
NOTE
Red tube connects front aluminium tube to the lower connection on elbow or adapter each being identified with a red ring.

E. Reconnect the fan supply and earth leads.

4. PILOT BURNER

The following operations are only necessary if the pilot flame is distorted or the wrong size, ie too small.

A. Unscrew the pilot tube from the pilot assembly. Take care

B. Unscrew the two hexagonal head screws securing the pilot to the main burner and remove the pilot assembly.

C. Lightly brush the pilot to remove any deposits.

Unscrew the pilot injector and clean its orifice or replace.

NOTE
Do not use a wire brush or pin to clean injector.

D. Gently clean any deposits from the electrode.

E. Refit the pilot injector to the pilot burner and assemble the pilot to the pilot tube.

F. Secure the pilot assembly to the main burner using two hexagonal screws.

G. Fully tighten the union nut connecting the pilot tube to the pilot. Check for gas soundness at this joint by following the procedure described in the commissioning section of these instructions. Page 18.

H. Ensure that the spark gap is as illustrated in FIG. 29.

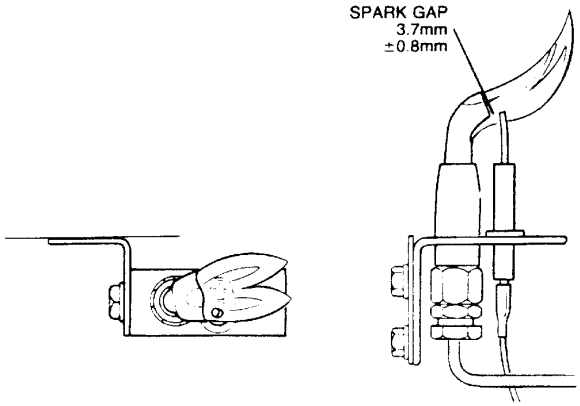

FIG. 29 PILOT BURNER SPARK GAP TOLERANCES

PILOT FILTER

The pilot burner is protected from blockage by a pilot filter situated within the gas control valve. The filter is large and designed to last the life of the gas control valve under normal operating conditions, it is therefore unlikely to need replacing. However in the event of pilot filter blockage being suspected the complete control valve should be replaced.

5. COMBUSTION CHAMBER INSULATION

A. Check the combustion chamber insulation for damage. If damaged replace as described under replacement.

6. MAIN BURNER

A. Lightly brush any deposits from the top of each blade and ensure there is no fluff in the entry of the burner venturi. If on re-assembly the burner flame picture is incorrect or the correct gas rate or burner pressure cannot be obtained, remove the burner and gas control assembly and thoroughly clean the burner. Clean or replace the injector. In the event of the above procedures not rectifying the flame appearance, disconnect the burner from the gas control valve at the flanged connection and replace the burner and injector.

B. Refit the burner and gas control valve assembly into the boiler, ensuring that the locating pin on the rear of burner engages correctly into the rear support bracket. Make sure that the sealing gasket is in place and undamaged between the burner flange and the case. Secure the assembly with two screws.

C. Refit the screw securing the gas control valve to the support bracket.

D. Reconnect electrode lead to electrode.

E. Plug gas control valve supply leads into control box.

F. Reconnect gas supply at gas service cock and turn on gas.

G. Refit the combustion chamber front panel.

7. CASE SEAL
Check the case door seal. Replace if damaged. The seal is simply pressed into the channel around the door.

8. RECOMMISSION
Follow the full commissioning procedure as detailed in the COMMISSIONING section of these instructions page 18.

9. OTHER BOILER MOUNTED UNITS
No further servicing is required on any other boiler mounted units. Repair is by replacement.

10. FAULT FINDING
Refer to Fault Finding Chart FIG. 30 and Wiring Diagram FIGS. 26, 27.

REMOVAL/REPLACEMENT OF BOILER MOUNTED UNITS

GAS CONTROL VALVE
This operation is most easily carried out by first removing the burner and gas control valve assembly as follows:-

1. Switch off the external electricity supply by disconnecting the plug at the socket or switching off the external isolating switch.

2. Remove controls cover, case door and combustion chamber front panel as described in 1. 'Preparing the Boiler for Servicing', operations A, B and C.

3. Remove the burner and gas control assembly as described in 1. 'Preparing the Boiler for Servicing', operations G, H, I, J & K.

4. Disconnect the electrical supply wires from the gas control valve noting their position. Refer to FIGS. 26 & 27.

5. Unscrew the union connecting the pilot supply pipe to the gas control valve.

6. Separate the gas control valve from the flanges at the inlet and outlet ports by removing the securing screws.
NOTE: A spacer is used between the valve outlet and the burner flange, requiring the use of two seals at this point. See FIG. 25.

7. Use new seals on reassembly.

8. Replacement is the reverse of removal.

9. Follow the full commissioning procedure as detailed in the COMMISSIONING section of these instructions. Page 18.

MAIN BURNER
1. Switch off the external electricity supply by disconnecting the plug at the socket or switching off the external isolating switch.

2. Remove controls cover, case door and combustion chamber front panel as described in 1. 'Preparing the Boiler for Servicing', operations A, B and C.

3. Remove the burner and gas control assembly as described in 1. 'Preparing the Boiler for Servicing', operations G, H, I, J & K.

4. Unscrew the union nuts connecting the pilot supply pipe to the pilot and gas control valve. Take care not to damage the electrode.
Remove sealing grommet and withdraw the pilot tube through the hole in the burner mounting flange.

5. Separate the burner from the gas control valve at the flanged connection by removing the four securing screws.

NOTE
A spacer is used between the valve outlet and the burner flange, requiring the use of two seals at this point. See FIG. 25.

6. Unscrew the pilot, main burner injector and pressure test nipple from the burner.

7. Use new sealing gaskets on reassembly.

8. Replacement is the reverse of removal.

9. Follow the full commissioning procedure as detailed in the COMMISSIONING section of these instructions. Page 18.

PILOT/IGNITION ELECTRODE
1. Switch off the external electricity supply by disconnecting the plug at the socket or switching off the external isolating switch.

2. Remove controls cover, case door and combustion chamber front panel as described in 1. 'Preparing the Boiler for Servicing', operations A, B and C.

3. Disconnect the electrode lead from electrode.

4. Unscrew the pilot tube from the pilot assembly. Take care not to damage the electrode.

5. Unscrew the two hexagonal head screws securing the pilot to the main burner and remove pilot assembly.
Remove the screw securing the electrode and withdraw electrode.

6. Replacement is the reverse of removal. On reassembly ensure that the spark gap is as illustrated in FiG. 29.

7. Follow the full commissioning procedure as detailed in the COMMISSIONING section of these instructions. Page 18.

COMBUSTION CHAMBER INSULATION
1. Switch off the external electricity supply by disconnecting the plug at the socket or switching off the external isolating switch.

2. Remove controls cover, case door and combustion chamber front panel as described in 1. 'Preparing the Boiler for Servicing', operations A, B and C.

3. Remove main burner as described in Preparing the Boiler for Servicing', operations G, H, I, J & K

4. Bend back retaining tabs and replace insulation. It is necessary to first remove the side insulation when replacing the rear.

5. Replacement is the reverse of removal.

6. Follow the full commissioning procedure as detailed in the COMMISSIONING section of these instructions. Page 18.

FUSE, ELECTRONIC CONTROL, PRESSURE SWITCH, BOILER THERMOSTAT, OVERHEAT THERMOSTAT, PUMP OVERRUN THERMOSTAT

The following initial operations 1-3 are necessary to remove and replace any of the above items.

1. Switch off the external electricity supply by disconnecting the plug at the socket or switching off the external isolating switch.

2. Remove controls cover by opening the door covering the securing screw on the underside of the controls cover see FIG. 13. Undo securing screw, pull controls cover forward 10mm, lower it to release it from its four side fixings and pull forward clear of the thermostat knob.

3. Remove control box securing screw and lower control box.

FUSE 1 amp

4. The fuse is located on the electronic control and can be replaced by lifting it from its holder.

5. Replacement is the reverse of removal. Refer to FIGS. 26 & 27.

ELECTRONIC CONTROL

4. Disconnect six way plug, two way plug and electrode lead from the electronic control. Refer to FIGS. 26 & 27.
   Disconnect the flying leads of the electronic control as follows:- white wire from terminal C(3) of the control thermostat
   white wire from terminal NC (2) of the control thermostat
   brown wire from overheat thermostat
   blue wire from boiler terminal block connector N
   green/yellow wire from earth post

5. Release the control by lifting it from the four retaining lugs.

6. Remove electronic control.

7. Replacement is the reverse of removal.

8. Follow the full commissioning procedure as detailed in the COMMISSIONING section of these instructions. Page 18.

PRESSURE SWITCH

4. Remove the screw securing the pressure switch to the bracket in the control box. Lift pressure switch from bracket.

5. Disconnect the two plastic tubes. NOTE: the red tube is connected to the pressure switch connection identified with a red ring, or adjacent red spot.

6. Disconnect the three electrical leads, white wire from terminal No.1 or NC, orange from terminal No.2 or NO and brown from terminal No. 3 or C. Refer to FIGS 26 & 27.

7. Replacement is the reverse of removal. Ensure that the plastic tubes have the coiled springs positioned to prevent the tubes from kinking.

8. Follow the full commissioning procedure as detailed in the COMMISSIONING section of these instructions. Page 18.

OVERHEAT THERMOSTAT

4. Remove door by undoing the two lower fixing screws and lifting door off the two upper hinge brackets.

5. Disconnect the two push on electrical connections from the overheat thermostat terminals.

6. Remove the nut securing the overheat thermostat to its mounting bracket.

7. Noting the route taken by the capillary, remove split pin retaining the thermostat bulb and withdraw bulb from its pocket. Remove the split grommet in the base of the boiler, feed the thermostat capillary and bulb through the hole.

8. Replacement is the reverse of removal. Ensure the rubber grommet in the base of the boiler makes a good seal around the capillary. Ensure that the capillary is secure in the clips provided. Refer to FIG. 2. The bulb of the new thermostat should be coated with heat conducting paste.

9. Follow the full commissioning procedure as detailed in the COMMISSIONING section of these instructions. Page 18.

BOILER THERMOSTAT

4. Remove door by undoing the two lower fixing screws and lifting door off the two upper hinge brackets.

5. Disconnect the electrical connections as follows:-
   White from terminal C(3). White from NC(2)
   Refer to FIGS. 26 & 27.

6. Pull off the outer thermostat knob.

7. Remove inner thermostat post by undoing the two securing screws.

8. Remove the nut securing the thermostat to the control box.
9. Remove the clip securing the thermostat bulb to the flow pipe.

10. Remove the split grommet in the base of the boiler. Feed the capillary and bulb through the holes.
    Replacement is the reverse of removal. The bulb of the new thermostat should be coated with heat conducting paste. Ensure the rubber grommets in the base of the boiler make a good seal around the capillary.
    Ensure that the capillary is secure in the clips provided.
    Follow the full commissioning procedure as detailed in the COMMISSIONING section of these instructions. Page 18.

PUMP OVER-RUN THERMOSTAT

4. Remove door by undoing the lower fixing screws and lifting door off the two upper hinge brackets.

5. Disconnect the electrical connections as follows:-

   1 red wire from terminal NO(4)

   2 brown wires from terminal NC(2)

   1 black wire from terminal C(3)

6. Remove the screw securing the thermostat to the control box.

7. Remove the clip securing the thermostat bulb to the flow pipe.

8. Remove the split grommet in the base of the boiler. Feed the capillary and bulb through the hole.

9. Replacement is the reverse of removal. The bulb of the new thermostat should be coated with heat conducting paste. Ensure the rubber grommet makes a good seal around the capillary.

10. Ensure that the capillary is secure in the clips provided. Follow the full commissioning procedure as detailed in the COMMISSIONING section of these instructions. Page 18.

SIGHT GLASS

WARNING: GREAT CARE SHOULD BE TAKEN WHEN HANDLING AND DISPOSING OF A BROKEN SIGHT GLASS.

3. Remove door by undoing the lower fixing screws and lift door off the two upper hinge brackets.

4. Remove three M4 nuts from sight glass retainer and remove sight glass assembly. **See above**.

5. Replacement is the reverse of removal. Taking care that the clear circle in the sight glass lines up viewing hole in combustion chamber door. NOTE new gaskets must be used when sight glass is fitted.

FAN

1. Switch off the external electricity supply by disconnecting the plug at the socket or switching off the external isolating switch.

2. Remove controls cover and case door as described in 1. ‘Preparing the Boiler for Servicing’, Operations A and B.

3. Disconnect the two flexible tubes from the flue elbow.

4. Remove thumb screw securing the flue elbow and withdraw elbow. Take care not to damage the gasket. On vertically flued boilers remove two thumb screws and slide the vertical flue adapter up into the flue duct.

5. Disconnect the fan supply and earth leads from the connector adjacent to the fan.

6. Separate fan from fluehood by removing the two securing screws.

7. Replacement is the reverse of removal. Ensure on reassembly that the fan is correctly located in the rear retaining bracket.

8. Follow the full commissioning procedure as detailed in the COMMISSIONING section of these instructions. Page 18.

TEST PROCEDURE FOR MEASURING FLAME CURRENT

Disconnect the white wire from GV2 on gas control valve and connect it via a suitable test switch to **neutral** as shown. Set test switch to OFF. Insert an approved ammeter in series with the spark electrode.

Turn ON the electricity supply and restart the boiler.

NOTE: The pilot will light but not the main burner as GV2 is disconnected.

When the pilot is established set the test switch to ON. This will stop the spark and allow a steady flame current to be measured.

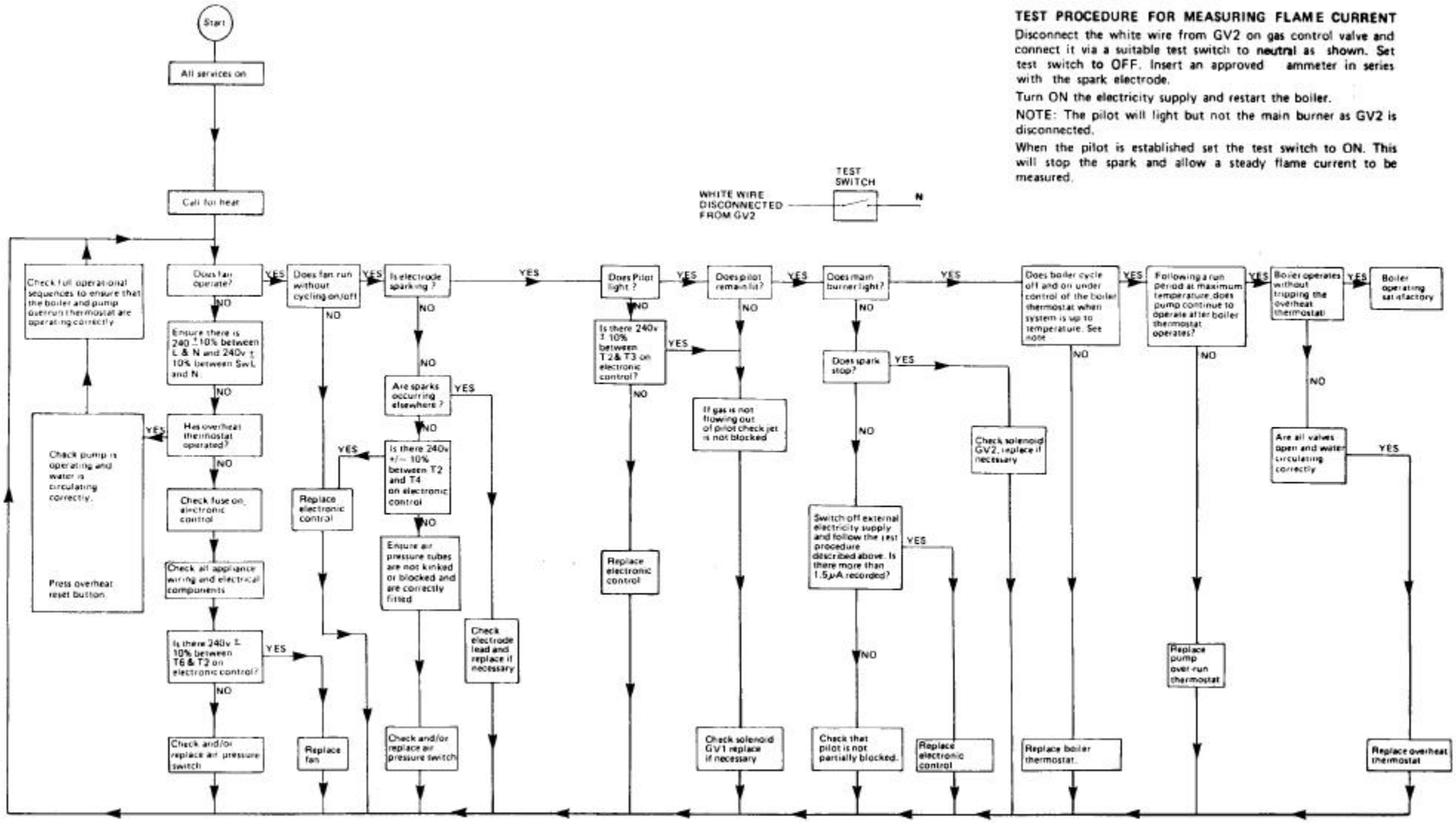

;. 30 FAULT FINDING CHART

SHORT PARTS LIST

KEY No.		P.I.L Part No.
1	Pilot and Electrode Assembly including items 2-6	402967
2	Pilot Injector	402968
3	Compression Nut	625934
4	Olive	625936
5	Electrode	407721
6	Screw	612351
7	Electrode Lead	407692
8	Control Thermostat K36 L1014	907729
9	Gas Control Valve - Honeywell	402911
10	Gas Manifold Gasket	212105
11	Gas Manifold 'O' Ring	401637
12	Pump Over-Run Thermostat K36 P2302	404507
13	Flue Elbow Sealing Gasket	225091
14	Electronic Control	407677
15	Fuse (1 amp) T1A	907604
16	Thermostat Knob	213076
17	Pressure Switch - Honeywell C6065A1192	642220
18	Fan Assembly - SEL (c.w. Gasket)	909001
19	Overheat Thermostat LM7 P8503	404495
20	Main Burner Gasket	212085
21	2.2mm Injector - Main Burner 50e Boiler	410971
	2.4mm Injector - Main Burner 60e Boiler	410976
	2.7mm Injector - Main Burner 80e Boiler	410987
	3.0mm Injector - Main Burner 100e Boiler	410981
22	Flue Scraper	907736

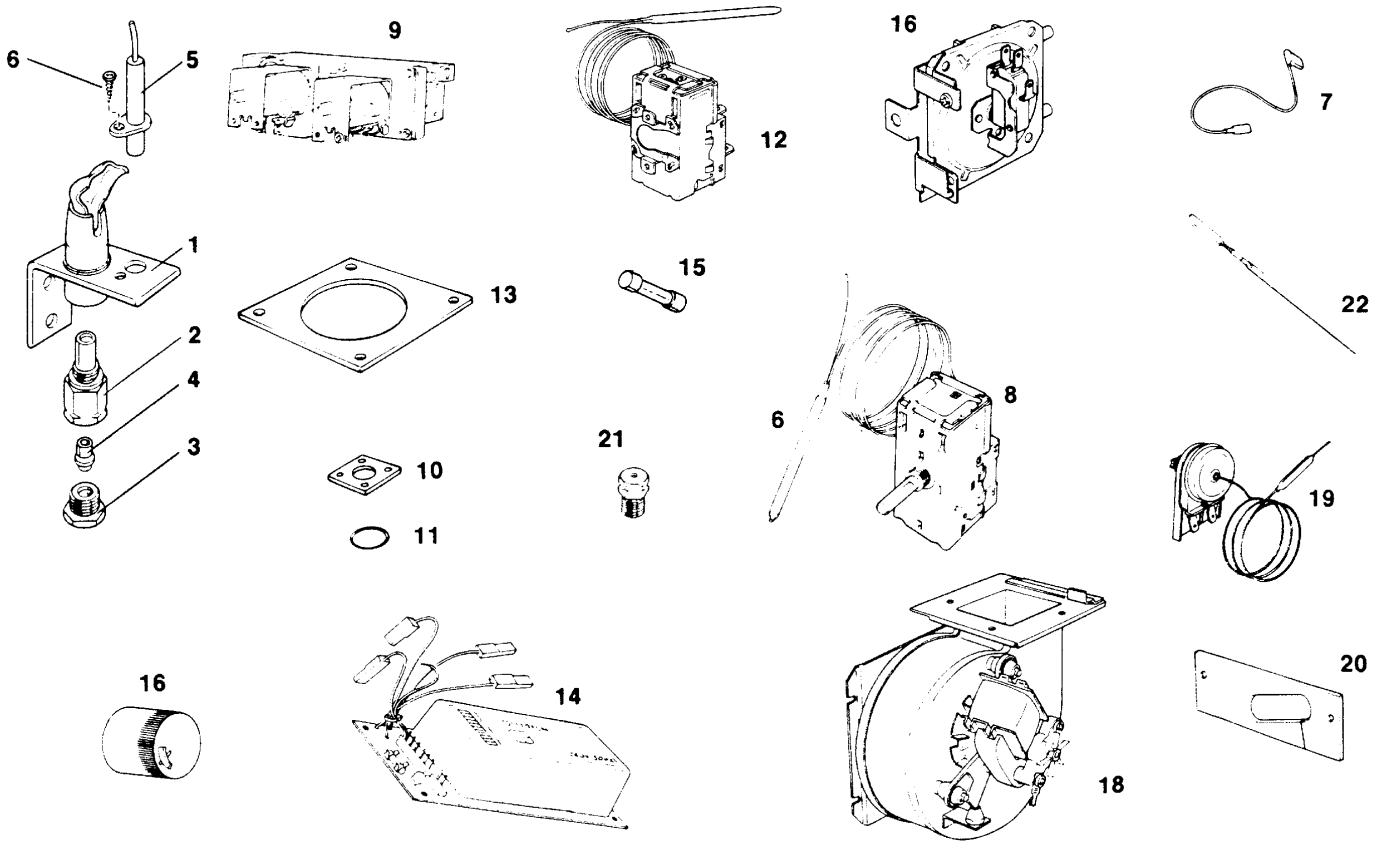

INSTALLER AND SERVICE ENGINEER - Page 28

Under the Consumer Protection Act 1987 and section 6 of the Health and Safety at Work Act 1974, we are required to provide information on substances hazardous to health.

Small quantities of adhesives and sealants used in the product are cured and present no known hazards.

The following substances are also present.

Insulation & Seals

Material	-	Ceramic Fibre; Alumino - Silicone Fibre
Description	-	Boards, Ropes, Gaskets
Known Hazards	-	Some people can suffer reddening and itching of the skin. Fibre entry into the eye will cause foreign body irritation. Irritation to respiratory tract.
Precautions	-	People with a history of skin complaints may be particularly susceptible to irritation. High dust levels are only likely to arise following **harsh** abrasion. In general, normal handling and use will not present discomfort, follow good hygiene practices, wash hands before consuming food, drinking or using the toilet.
First Aid	-	Medical attention must be sought following eye contact or prolonged reddening of the skin.

Thermostat

Material	-	Contains very small quantity of xylene.
Description	-	Sealed phial and capillary containing liquid.
Known Hazards	-	Irritating to skin, eyes and throat. Vapour is harmful. Inflammable - do not extinguish with water.
Precautions	-	Do not incinerate. Avoid contact with broken/leaking phials. Do not purposely puncture.
First Aid	-	Eye/skin contact, wash with clean water, seek medical attention.

Back Page